TIANGXI
COMPONENTS

APPROVAL SHEET

RoHS Compliant

CUSTOMER:	MINYX servis s.r.o.
DESCRIPTION:	HC-49U/S 9.8304MHz Quartz Crystal Resonator
MANUFACTURER PART NO.:	QM 9.830MHz 30ppm 20pF -20~+70°C
CUSTOMER PART NO:	
USED IN MODEL:	
REVISION	A1

承　　认　　APPROVAL		
工程部 TECHNOLOGY DEPT.	品质部 QUALITY DEPT.	采购部 PURCHASING DEPT.

Date: November 17, 2021

Rev	Revise page	Revise contents	Date	Ref.No.	Reviser
A1	ALL	Initial released	2021.11.17	N/A	DavidJiang

1. QUARTZ CRYSTAL UNIT SPECIFICATION

Parameter	Specification
1.1 Frequency:	9.8304MHz
1.2 Mode of Oscillation	AT Fundamental
1.3 Holder type :	HC-49/S
1.4 Frequency tolerance:	±30ppm at 25℃±3℃
1.5. Equivalent resistance (Rr):	60Ω Max.
1.6 RLD2:	30Ω Max.
1.7 Operating temperature range:	-20℃ To +70℃
1.8 Storage temperature range:	-40℃ To +85℃
1.9. Frequency stability:	±30ppm at -20℃ To +70℃
1.10 Loading capacitance (CL) :	20pF
1.11 Drive level (DL):	100 uW Typical
1.12 Shunt Capacitance (C0):	7.0pF MAX
1.13 Insulation resistance (IR) :	More than 500M ohms at DC 100V
1.14 Circuit:	Measured in S&A 250B
1.15 Aging:	±3 ppm Max (+25℃ 1st Year)
1.16 Dimensions and marking	Refer to page.3
1.17 Other	RoHS Compliant (Pb free)

Standard atmospheric conditions

Unless otherwise specified, the standard range of atmospheric conditions for making measurement and tests are as follow:

Ambient temperature : 25±3℃

Relative humidity : 40%~70%

2. MARKING & DIMENSIONS

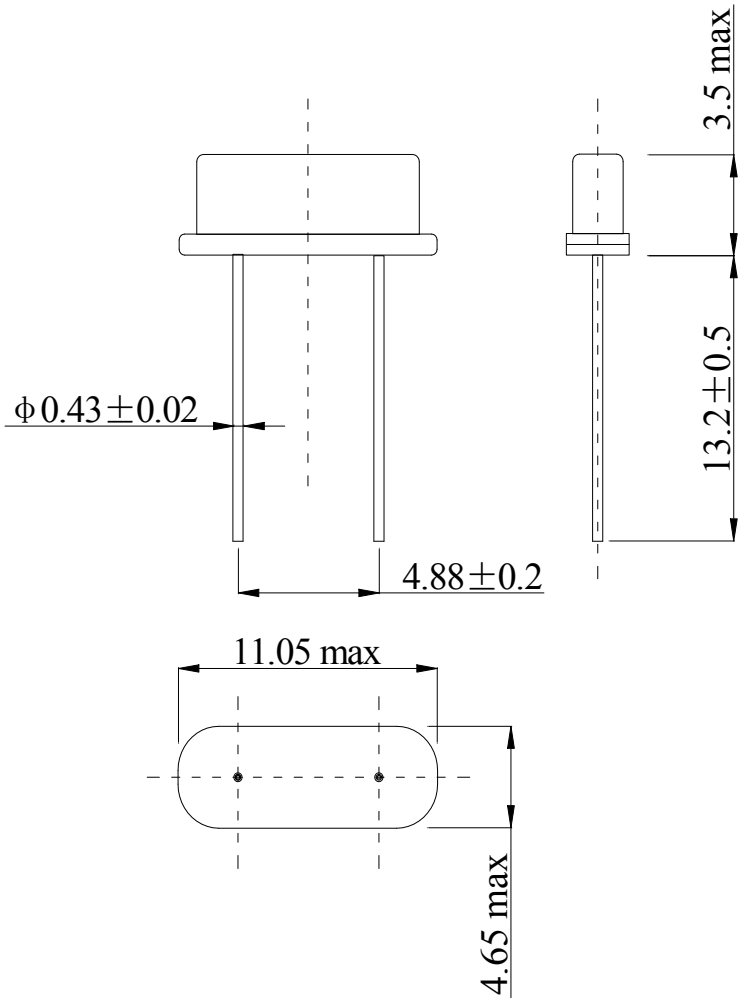

*Marking should be printed as following:

Logo, Nominal Frequency

Logo：T

Nominal Frequency：（ex. 3.579545MHz∨3.579545）

Marking: Laser marking

3.MECHANICAL/ENVIRONMENTAL CHARACTERISTICS

NO.	项 目 ITEM	条 件 CONDITIONS	规 格 SPECIFICATIONS
3.1	漏气试验 Leaking Test	完全浸入 90±3℃热水中 3 分钟。 Fully immersed into hot water at 90℃ ±3℃ for 3 minutes.	无气泡存在 no air bubble are visible.
3.2		用氦质谱仪测试或加压测绝缘电阻 Take measurements with a helium leakage detector，or measure insulation resistance under pressure.	1×10^{-8} Pa.m^3 /s Max or IR≥500MΩ
3.3	跌落试验 Drop Test	高度 75cm，自由落体于 3cm 木板上，6 次 Dropping 6 times from the height of 75 cm onto hard wooden board of thickness more than 30mm.	频率变化±5ppm 以内, 电阻变化 15%以内 The crystal must meet: Δf≤±5ppm ΔR≤15%
3.4	振动试验 Vibration Test	频率 10~55Hz，振幅 1.5mm，时间 1.5 分钟循环，在 XYZ 方向各 2 小时。 Vibration Frequency: 10~55Hz Cycle: 1.5 Min. Amplitude: 1.5mm P-P. Direction: X.Y.Z Time: 2 Hours / Each Direction	频率变化±5ppm 以内, 电阻变化 15%以内 The crystal must meet: Δf≤±5ppm ΔR≤15%
3.5	可 焊 性 Solderability Test	从引线末端至距底部 2mm 处放入 230℃±5℃焊槽内,时间：5±0.5 秒。 The terminal lead wire is to be soaked in a 230℃ ±5℃ tin trough for 5±0.5 seconds.	沾锡面≥90%.频率变化±5ppm 以内,电阻变化 15%以内 Tin over the wire≥90% The crystal must meet: Δf≤±5ppm ΔR≤15%
3.6	耐低温性 Low Temperature Enduring	在-40℃±3℃下,放置 96 小时,取出后在常温下恢复 2 小时。 The samples crystal is to be tested after being placed in the environment of -40C±3℃ for 96 hours, and recovered to room temperature for 2 hours.	频率变化±5ppm 以内, 电阻变化 15%以内 The crystal must meet: Δf≤±5ppm ΔR≤15%
3.7	耐高温性 High Temperature Enduring	在+85℃±3℃下放置 96 小时,取出后在常温下恢复 2 小时。 The samples crystal is to be tested after being heated at +85±3℃ for 96 hours, and cooled to room temperature for 2 hours.	频率变化±5ppm 以内, 电阻变化 15%以内 The crystal must meet: Δf≤±5ppm ΔR≤15%

3.8	恒定湿热 Humidity	在 40±3℃、RH 93%±2%下放置 96 小时,取出后恢复 2 小时。 The temperature is at 40±3℃, and at 93% ±2% RH after 96 hours， and cooled to room temperature for 2 hours.	外观无异常, 频率变化±5ppm 以内, 电阻变化 15%以内 The crystal must meet: Δf≤±5ppm ΔR≤15%
3.9	耐焊接热 Resistance to Solder Heat	引线端子应插入 350±5℃的焊接槽中 3±0.5 秒或 260±5℃的焊接槽中 10±0.5 秒，插入深度为从引线末端至距底部 2mm 处，而后放在自然环境中 1 小时，再进行测试。 Lead terminals are immersed up to 1.5mm from resonator's body in soldering bath of 350±5℃ for 3±0.5 sec. And then resonator shall be measured after being placed in room temperature for 1 hour.	外观无异常, 频率变化±5ppm 以内, 电阻变化 15%以内 The crystal must meet: Δf≤±5ppm ΔR≤15%
3.10	热冲击 Thermal shock	在-40℃保持30分钟，+85℃保持30分钟，循环10次。 Should be satisfied after supplying the following temperature cycle (10 cycles). (Refer to Fig-4). Temperature shift from low to high, high to low shall be done in 1℃/min. 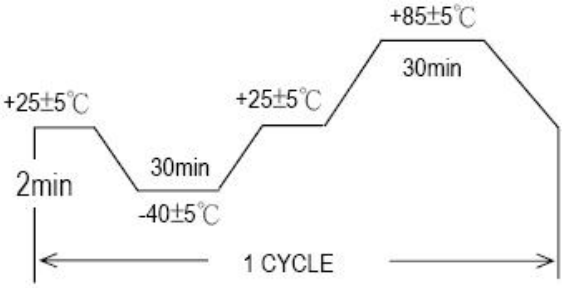 Fig-4	外观无异常, 频率变化±5ppm 以内, 电阻变化 15%以内 The crystal must meet: Δf≤±5ppm ΔR≤15%

4. PACKAGE 包装

4.1 Quantity of package:

250 pieces of crystal unit per bag

2500 pieces of crystal unit per inner box，10 bags

25000 pieces of crystal unit per carton，10 inner boxes