REV.	DESCRIPTION OF REVISIONS	APPR.	DRAW.	RELEASE	DATE
X1					
X2					

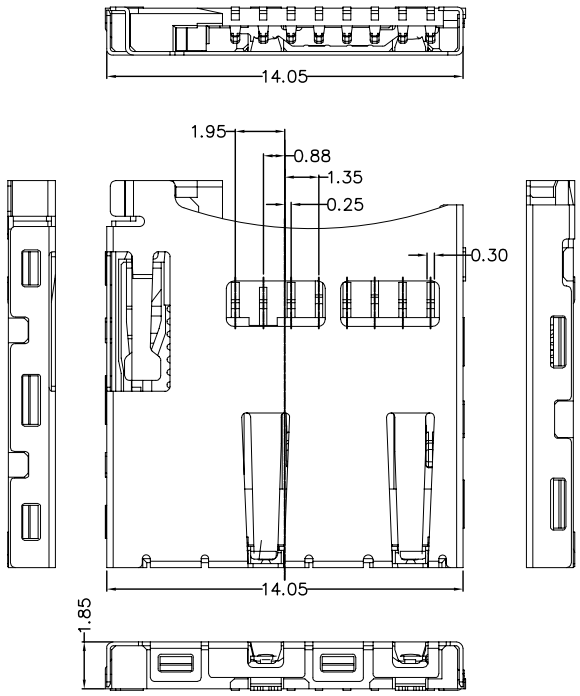

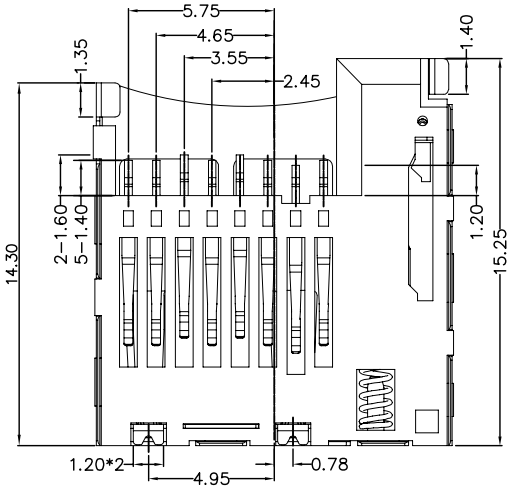

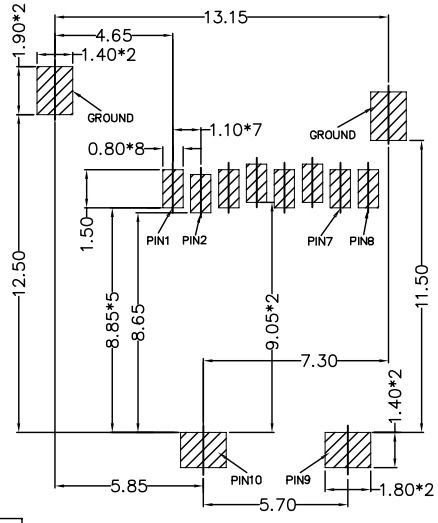

RECOMMENDED P.C.B LAYOUT
COMPONENT SIDE(TOLERANCE ±0.05)

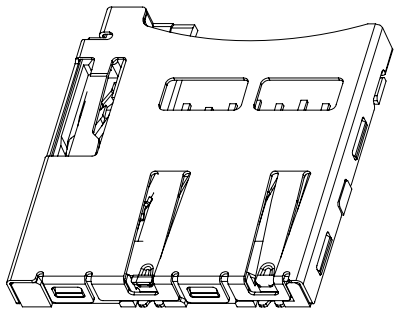

microSD CARD	
Pin No.	NAME
P1	DAT2
P2	CD/DAT3
P3	CMD
P4	VDD
P5	CLK
P6	VSS
P7	DAT0
P8	DAT1

ELECTRIC FUNCTION	DETECT SWITCH
WITHOUT CARD	CLOSED
CARD INSERTED	OPEN

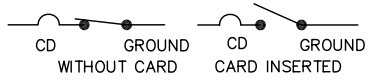

SWITCH OPERATION DIAGRAM

TECHNICAL CHARACTERISTICS

1.General Characteristics
Dimensions: 15.25LX14.05WX1.85H mm
Weight: Approx 0.50±0.2g
Durability: 2,000 cycles min.

2.Electrical Characteristics
Contact resistance: 50mΩ typical,100mΩ max
Insulation resistance: >1000MΩ/250V DC

3.Solderability
IR reflow: 250°C,5sec.Max
Manual soldering: 370°C,3sec.Max

4.Environmental Characteristics
Operating temperature: −25°C~+85°C
Operating humidity: 10%~+95%RH

ITEM	PART NAME	Q'TY	MATERIAL	FINISH
1	HOUSING	1	Hi−temp Thermoplastic	Black UL94V−0
2	TERMINAL	8	Copper Alloy	Contact area:Gold plated
3	CARD DETECT	1	Copper Alloy	Contact area:Gold plated
4	SHELL	1	Stainless steel	SMT area:Gold plated
5	SLIDER	1	Hi−temp Thermoplastic	Black UL94V−0
6	CRANK−AXLE	1	Stainless steel	
7	SPRING	1	SWP	

Unless otherwise specified, other tolerance are:

X	±0.35	X°	±5°
X.X	±0.25	X.X°	±4°
X.XX	±0.15	X.XX°	±3°
X.XXX	±0.10	X.XXX°	±2°

PROJ. | UNIT: mm | SCALE: 1:1

CUSTOMER DRAWING

MUP® MUP INDUSTRIAL CO.,LTD.

NAME: **T-Flash Card Connector**
MODEL NO: **MUP-M627**
TYPE : **Push Type**

DRAWN	Zoey Dec.26.2015	DWG NO.:	DWG−MUP−M627−001
CHECKED	Jimmy Dec.26.2015	SHEET	1/1
APPROVAL	Simon Dec.26.2015	REVISION	X1

RoHS PROCESS COMPLIANT