REV.	DESCRIPTION OF REVISIONS	APPR.	DRAW.	RELEASE	DATE
X1					
X2					

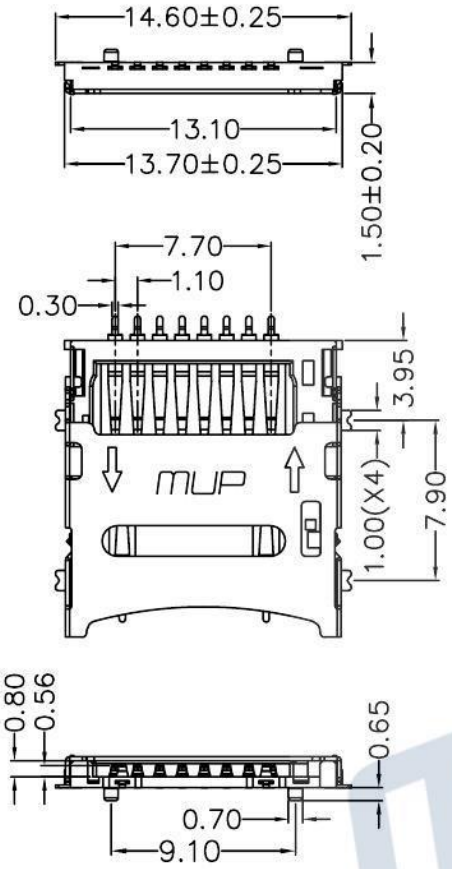

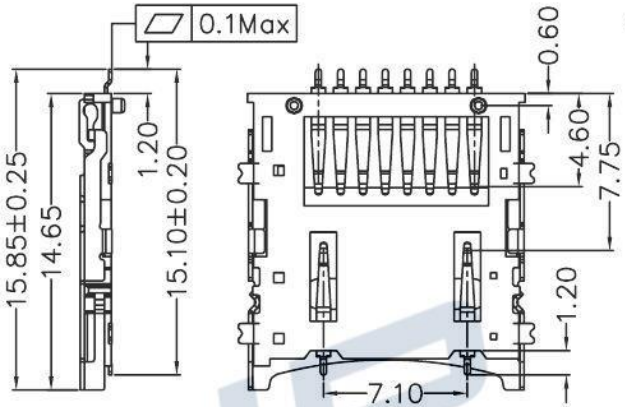

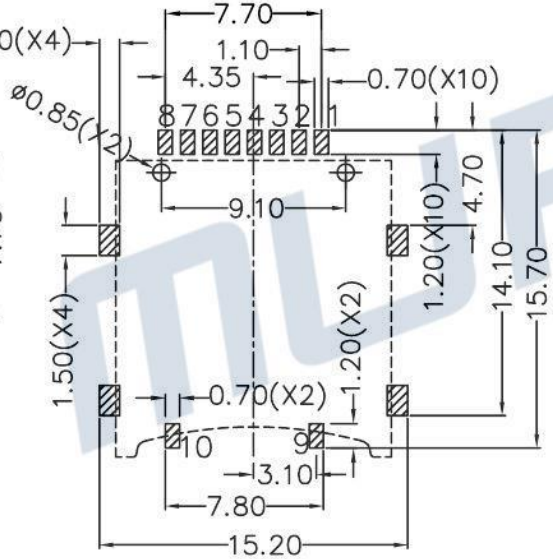

RECOMMENDED P.C.B LAYOUT
COMPONENT SIDE(TOLERANCE ±0.05)

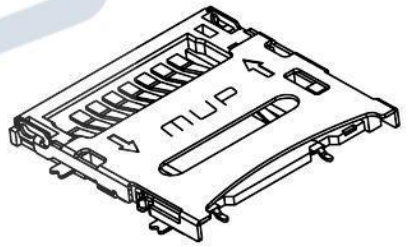

MicroSD CARD	
Pin No.	NAME
1	DAT2
2	CD/DAT3
3	CMD
4	VDD
5	CLK
6	VSS
7	DAT0
8	DAT1
9	RFIO
10	RFIO

TECHNICAL CHARACTERISTICS

1.General Characteristics

Dimensions: 15.85LX14.60WX1.50H mm

Weight: Approx 0.50±0.1g

Durability: 5,000 cycles min.

2.Electrical Characteristics

Contact resistance: 50mΩ typical,100mΩ max

Insulation resistance: >1000MΩ/500V DC

3.Solderability

Vaporphase: 215°C,30sec.Max

IR reflow: 250°C,5sec.Max

Manual soldering: 370°C,3sec.Max

4.Environmental Characteristics

Operating temperature: −40°C~+85°C

Operating humidity: 10%~+95%RH

ITEM	PART NAME	Q'TY	MATERIAL	FINISH
1	HOUSING	1	Hi−temp Thermoplastic	Black UL94V−0
2	TERMINAL	10	Copper Alloy	Contact area :Gold plated
3	SHELL	1	Stainless Steel	

Unless otherwise specified, other tolerance are:

X ±0.35	X° ±5°		
X.X ±0.25	X.X° ±4°		
X.XX ±0.15	X.XX° ±3°		
X.XXX ±0.10	X.XXX° ±2°		

MUP® MUP INDUSTRIAL CO.,LTD.

NAME: MicroSD Card Connector

MODEL NO: MUP-M623

TYPE : With post

PROJ.	UNIT	SCALE
CUSTOMER DRAWING	mm	1:1

DRAWN	Zoey Jul.13.2011	DWG NO.: DWG−MUP−M623−001
CHECKED	Jimmy Jul.13.2011	
APPROVAL	Simon Jul.13.2011	SHEET 1/1 REVISION X1

Pb RoHS PROCESS COMPLIANT