REV.	DESCRIPTION OF REVISIONS	APPR.	DRAW.	RELEASE	DATE
X1					
X2					

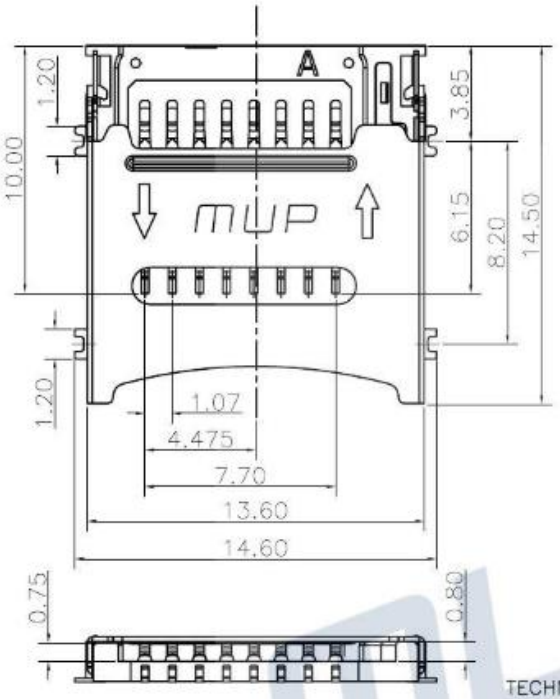

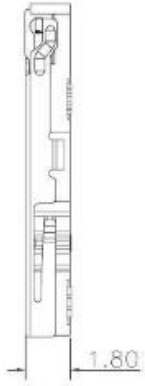

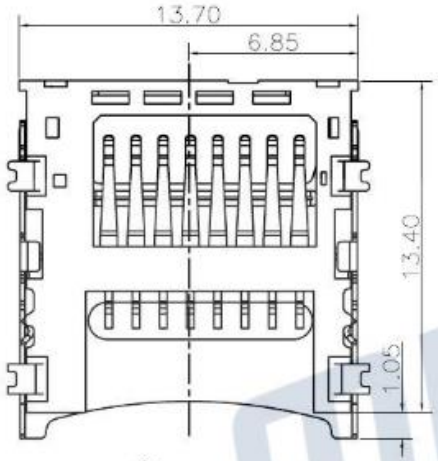

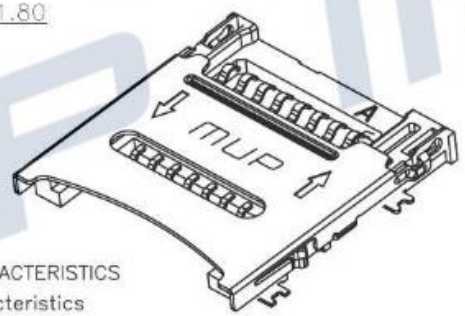

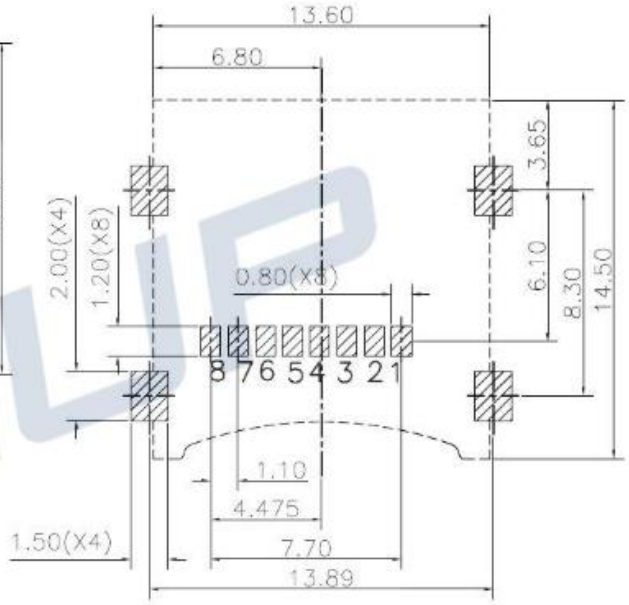

RECOMMENDED P.C.B LAYOUT
COMPONENT SIDE(TOLERANCE ±0.05)

TECHNICAL CHARACTERISTICS

1.General Characteristics

Dimensions:14.50LX13.60WX1.80H mm

Weight:Approx0.70g

Durability:5000 cycles min.

2.Electrical Characteristics

Contact resistance: 50mΩ typical,100mΩ max

Insulation resistance: >1000MΩ/500V DC

3.Solderability

IR reflow:260°C,10sec.Max

Manual soldering:370°C,3sec.Max

4.Environmental Characteristics

Operating temperature:−40°C~+85°C

Operating humidity:10%~+95%RH

MicroSD CARD	
Pin No.	NAME
1	DAT2
2	CD/DAT3
3	CMD
4	VDD
5	CLK
6	VSS
7	DAT0
8	DAT1

ITEM	PART NAME	Q'TY	MATERIAL	FINISH
1	HOUSING	1	Hi-temp Thermoplastic	Black UL94V-0
2	DATA CONTACT	8	Copper Alloy	Contact area:Gold plated
3	SHELL	1	Stainless Steel	

Unless otherwise specified, other tolerance are:

X ±0.35	X° ±5°		
X.X ±0.25	X.X° ±4°		
X.XX ±0.15	X.XX° ±3°		
X.XXX ±0.10	X.XXX° ±2°		

MUP® MUP INDUSTRIAL CO.,LTD.

NAME: MicorSD Card Connector

MODEL NO: MUP-M616

TYPE : H1.80 mm

PROJ.	UNIT	SCALE
	mm	1:1

CUSTOMER DRAWING

DRAWN	Henry 2015.7.21	DWG NO.: DWG-MUP-M616-003
CHECKED		SHEET 1/1 / REVISION X1
APPROVAL		

MUP MUP