SAMPLE APPROVAL

Model No.: MUP-M615

Revision: 1.0

Issue Date:Jan.23.2019

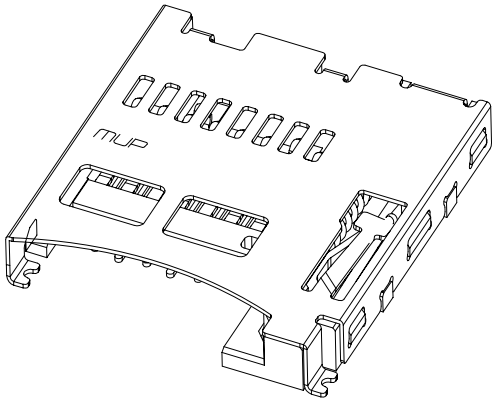

MUP INDUSTRIAL CO., LTD

LingWu Industrial Park, Junzibu, Guanlan Street, Baoan District Shenzhen, China

TEL: 0755-29673656/57/58 **FAX: 0755-29673655**

E-Mail: sales@mupconnector.com **URL: Http:// www.mupconnector.com**

MUP INDUSTRIAL CO., LTD. All Rights Reserved.
All specifications and details published are subject to change without notice.
Please don't reproduce or copy by any means.

1 Scope

This specification defines the detailed requirements for the MUP T-flash card Connector. This specification covers the materials, ratings, electrical, mechanical and environmental performance of the applicable product description and test method.

2 Applicable Documents

The following documents form a part of this specification to the extent specified herein, In the event of conflict between the requirements of this specification and the product drawing, the product drawing shall take precedence. In the event of conflict between the requirements of this specification and the referenced documents，this specifications shall take precedence.

2.1 Commercial Standards And Specification:

IEC-512 Test methods for electrical connectors.

MIL-STD-202/1344 Test methods for electrical connectors.

EIA 364-09 Test methods for electrical connectors.

3 Requirements

3.1 Design and Construction

Product shall be of the design, construction and physical dimensions specified on the applicable product drawing.

3.2 Materials

A. Insulator: High-temp thermoplastic,UL94V-0
Housing Color: Black; (LCP)

B. Terminal: Copper Alloy(C5210)
Finish: (a) Contact Area: 1u" Au plated over Nickel
(b) Solder Tail: 80~120u" Tin plated over Nickel
(c) Under plated : 50μ″ Nickel plated over all

C. Spring: SWP Finish: Nickel plated

D. Link: Stainless(SUS304)

E. Shell: Stainless(SUS304)
Finish: (a) Solder Tail: Gold Flash plated over Nickel

3.3 Ratings

Operating Current Rating: 0.5A

Voltage Rating: 5 V

Operating Temperature : -40℃ to 85℃

Storage Temperature :-40℃ to 85℃

Humidity: 95% max. (No condensing)

General Characteristics

Dimensions:15.20LX14.00WX1.85H mm

Weight:Approx 0.50 +/-0.2g

Made in: Made in China

Electrical Characteristics

Contact resistance:50mΩ typical,100mΩ max

Insulation resistance:>1000MΩ/500V DC

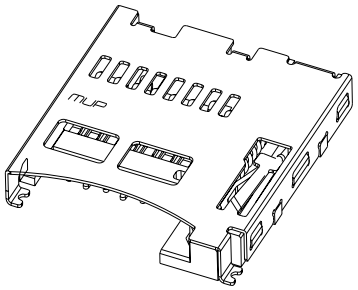

 All Rights Reserved.
All specifications and details published are subject to change without notice.
Please don't reproduce or copy by any means.

3.4 Test Requirements and Procedures Summary

Test Description	Requirement	Procedure
Examination of Product	Meets requirements of product Drawing. No physical damage.	Visual inspection, Confirmed by using proper measuring insulator.
Electrical performance		
Contact resistance	Contact Resistance shall not exceed. Initial: 80mΩ Max. After Test: 120mΩ Max. Card Detect Switch Contact Resistance: Initial: 500mΩ Max. After Test:540mΩ Max Between adjacent contact to contact.	IEC 512-2-2a, Open voltage 20mV,Test current 100mA
Insulation resistance	Initial: 1000mΩ Min After Test:1000mΩ Min Between adjacent contact to contact.	IEC 512-2-3a, Measure within 1 minute after applying
Dielectric Withstanding Voltage resistance	500VACrms between adjacent contact to contact.	IEC 512-2-4a, (a)No shorting or other damages when 500Vrms AC is applied for 1 minute. (b)Current leakage 1mA maximum.
Mechanical performance		
Insertion/Extraction force	Insertion Force: 30N Max. Extraction Force: 1.0N Min.~30N Lock Extraction Force: 2N Min.	Insertion and Extraction at speed of 25 mm/minute. Except influence of the force or eject and module lock mechanism.
Terminal retention force		
Static mechanism strength for card correct insertion	(1) No mechanical damage will occur on the part. (2)Be parallel to card insertion direction.	(1)Force to push the mating card for 20 seconds (2)Warranty strength:2Kg force
Static mechanism strength for card reversed insertion	(1) No mechanical damage will occur on the part. (2)Be parallel to card insertion direction.	(1)Force to push the mating card for 20 seconds (2)Warranty strength:2Kg force
Operating shock resistance	No mechanical damage will occur on the part.	(1) mate a card (2) half-sine wave shock (3) acceleration:50G (4) Duration time:2ms (5) 3 shocks per axis, total 18 shocks
Insertion/Extraction durability	(1) No physical damage. (2) Insertion/Extraction5, 000 Cycles. (3) Check point:1000 cycles	EIA 364-09. Mate and unmated connectors for 200±50 cycles per hour. One cycle as defined to insert card into the socked, and then push to release latch to extract card
Environmental performance		
Operation thermal shock	(1) No physical damage. (2) Contact resistance \ Insulation Resistance shall not exceed Final	Test condition:-40℃/30 minutes to +85℃ 30 minutes. Warranty Cycle:32cycles (1cycle=1hour)

All specifications and details published are subject to change without notice.
Please don't reproduce or copy by any means.

	value.(mate a card)	
Humidity-Temperature cycling	(1) No physical damage. (2) Contact Resistance \ Insulation Resistance shall not exceed Final Value.	IEC 512-6-11m With all kind of cards mated connectors to 10 Cycles(240 hours) Between -10℃ and 65℃ at 80~98% relative humidity (1 cycle/day).
Operating heat resistance	(1) No physical damage. (2) Contact Resistance \ Insulation Resistance shall not exceed Final Value.	Mated connectors shall be subjected during test. Temperature:-70℃ Duration:240 hours
Operating cold resistance	(3) No physical damage. (4) Contact Resistance \ Insulation Resistance shall not exceed Final Value.	Mated connectors shall be subjected during test. Temperature:-40℃ Duration:240 hours
Humidity	Contact Resistance \ Insulation Resistance shall not exceed Final Value.	Steady State 60+/-2℃, 95% RH 240 hours.
Salt spray	No harmful corrosion	MIL-STD-202F, method101D Temperature:35℃±2℃ Concentration: 5% Period: 24 hours.
Physical performance		
Solder ability	Solder Tail shall be covered more than 95% of immersed area with flash solder.	MIL-STD-202F, method 208 Solder temperature: 230℃±5℃ Period: 5±0.5sec.
Resistance to reflow physical surface heat	No physical damage shall occur.	Pre Heat: 160~190℃, 60~120sec. Reflow time: above 220 Min, 30~90sec. Peak Temp.:250+5/-0℃, 10sec. Duration :2 cycles(see figure3)

All specifications and details published are subject to change without notice.
Please don't reproduce or copy by any means.

3.5 Product Qualification And Test Sequence

Test or Examination	Test Group														
	A	B	C	D	E	F	G	H	I	J	K	L	M	N	O
Resistance to Reflow Physical Surface Heat	1	1	1	1	1	1	1	1	1	1	1	1	1	1	1
Examination of Product	2	2,6	2,6	2,6	2,6	2,6	2,6	2,8	2,8	2,10	2,6	2,6	2,10	2,6	1,3
Contact Resistance		3,5	3,5	3,5	3,5	3,5	3,5	3,7	3,7	3,9	3,5	3,5	3,9	3,5	
Insulation Resistance									4,6	4,8			4,8		
DWV										5,7			5,7		
Insertion/Extraction force	3							4,6							
Static mechanism strength for card correct insertion		4													
Static mechanism strength for card correct insertion			4												
Durability for card reversed insertion				4											
Operating random vibration					4										
Operating sine vibration						4									
Operating shock resistance							4								
Insertion/Extraction durability								5							
Operation thermal shock									5						
Humidity-Temperature cycling										6					
Operating heat resistance											4				
Operating cold resistance												4			
Humidity													6		
Salt spray														4	
Solder ability															2
Sample Quantity(pcs)	4	4	4	4	4	4	4	4	4	4	4	4	4	4	4

NOTE :(a) the numbers indicate sequence in which tests were performed.

(b) The test samples were randomly selected from normal current production lots.

(c) The test Group “O” doesn’t have to be test in IR reflow.

 All Rights Reserved.
All specifications and details published are subject to change without notice.
Please don’t reproduce or copy by any means.

3.6 Recommended IR Reflow Condition

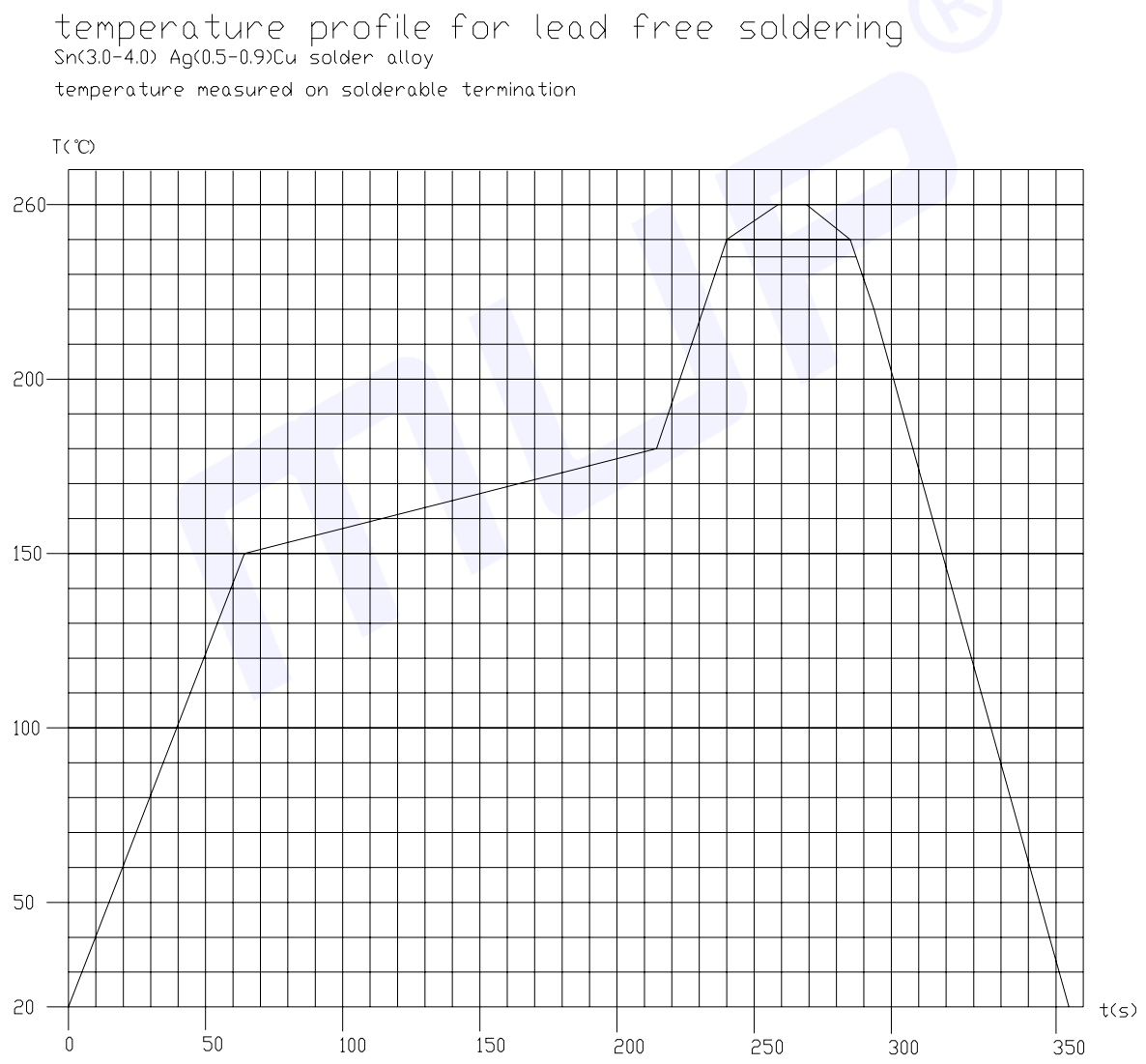

Parameter	Specification
Average temperature gradient in preheating	2.5 ℃/s
Preheating temperature	150℃~200℃
Soak time	120s~180s
Time above 217℃	40s~120s
Peak temperature in reflow	235℃~260℃
Time at peak temperature	10s~50s
Temperature gradient in cooling	Max-5℃/s

MUP INDUSTRIAL CO., LTD. All Rights Reserved.
All specifications and details published are subject to change without notice.
Please don't reproduce or copy by any means.

4 INTERFACE

4.1 Signals

Signal interface connections for shown below.

T-flash card or Micro SD card			
Contact No.	Assignment	Type	Description
1	DAT2	I/O/PP	Data Line（bite 2）
2	DAT3	I/O/PP	Card detect date line（bite3）
3	CMD	PP	Command response
4	VDD	S	Supply voltage
5	CLK	I	Clock
6	VSS	S	Supply voltage ground
7	DAT0	I/O/PP	Data Line（bite 0）
8	DAT1	I/O/PP	Data Line（bite 1）
CD	CD		Card detection
G	GND	GROUND	

4.2 T-Flash Card Contact Location

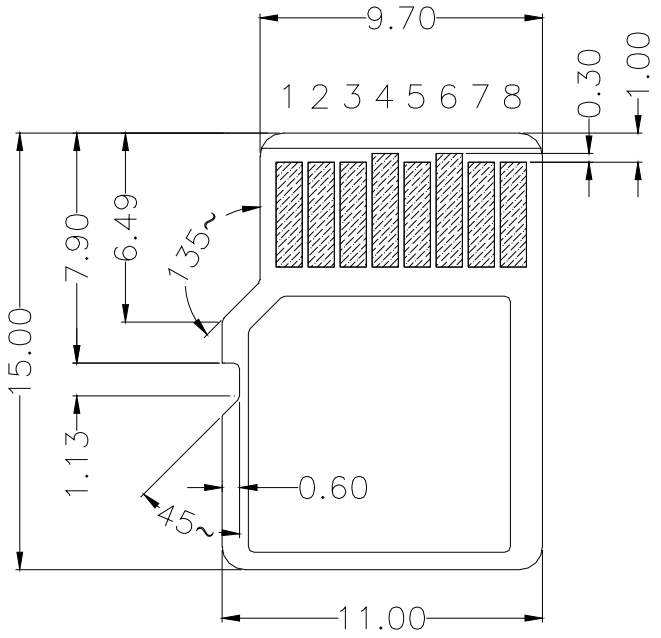

All specifications and details published are subject to change without notice.
Please don't reproduce or copy by any means.

5. MECHANICAL OUTLINE DRAWING

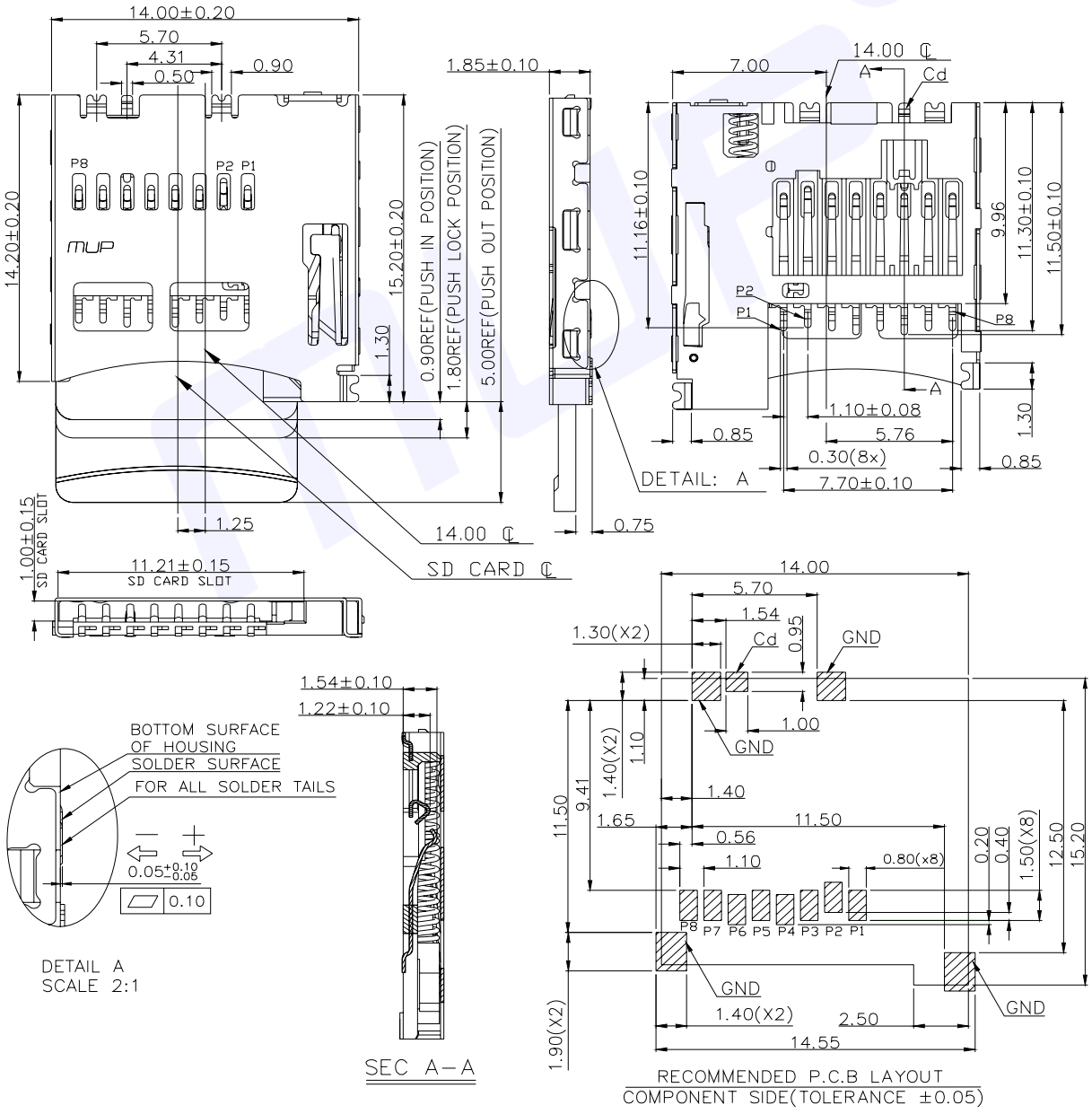

All specifications and details published are subject to change without notice.
Please don't reproduce or copy by any means.

6. packing Information

6.1 Carrier Dimensions Diagram

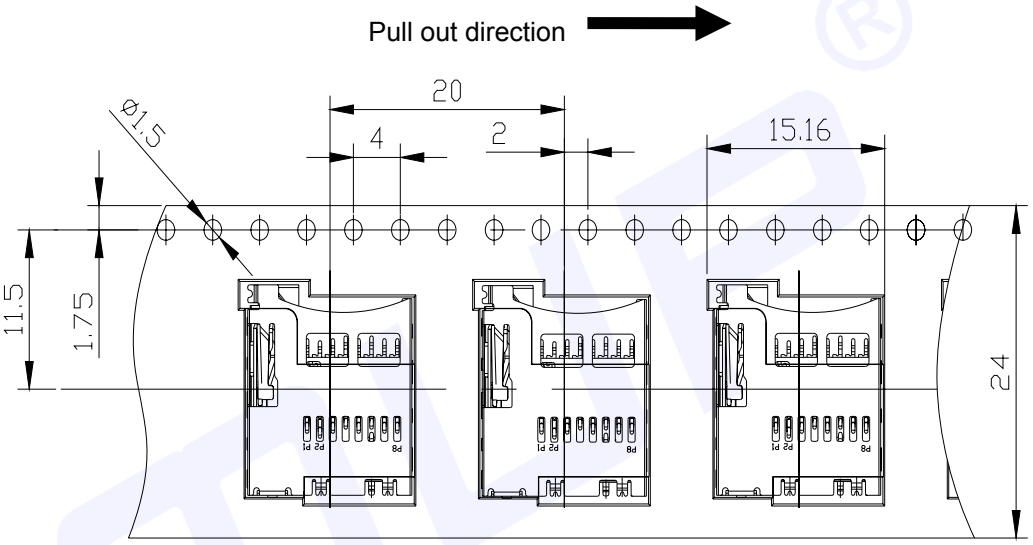

6.2 Reel Form Diagram

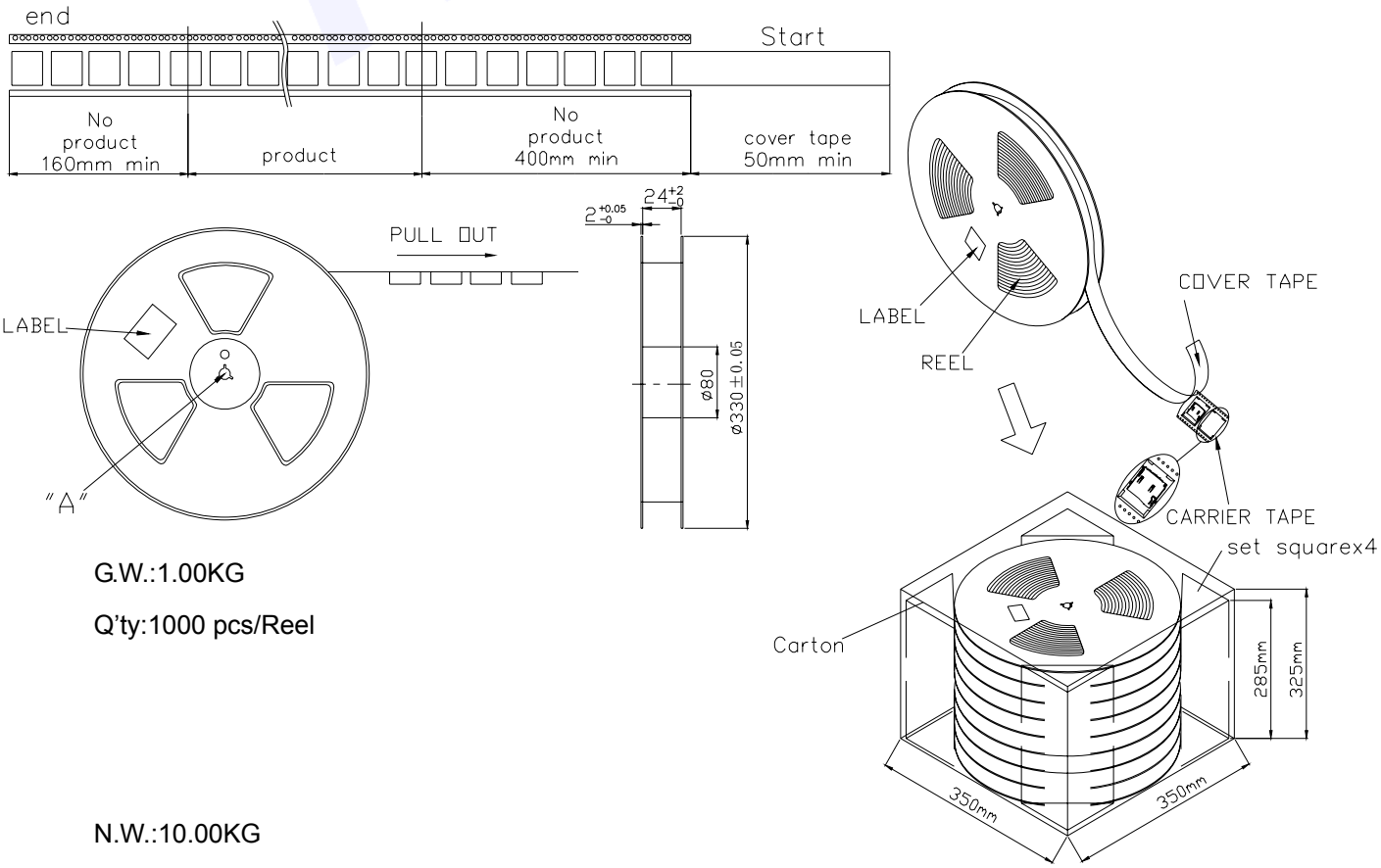

G.W.:1.00KG

Q'ty:1000 pcs/Reel

N.W.:10.00KG

G.W.:11.00KG

Q'ty: 10000 pcs per Carton (10Reel set in order)

Meas: 35.00L×35.00W×31.50H cm

 All Rights Reserved.
All specifications and details published are subject to change without notice.
Please don't reproduce or copy by any means.