REV.	DESCRIPTION OF REVISIONS	APPR.	CHKD.	DRAW.	DATE
X1					
X2					

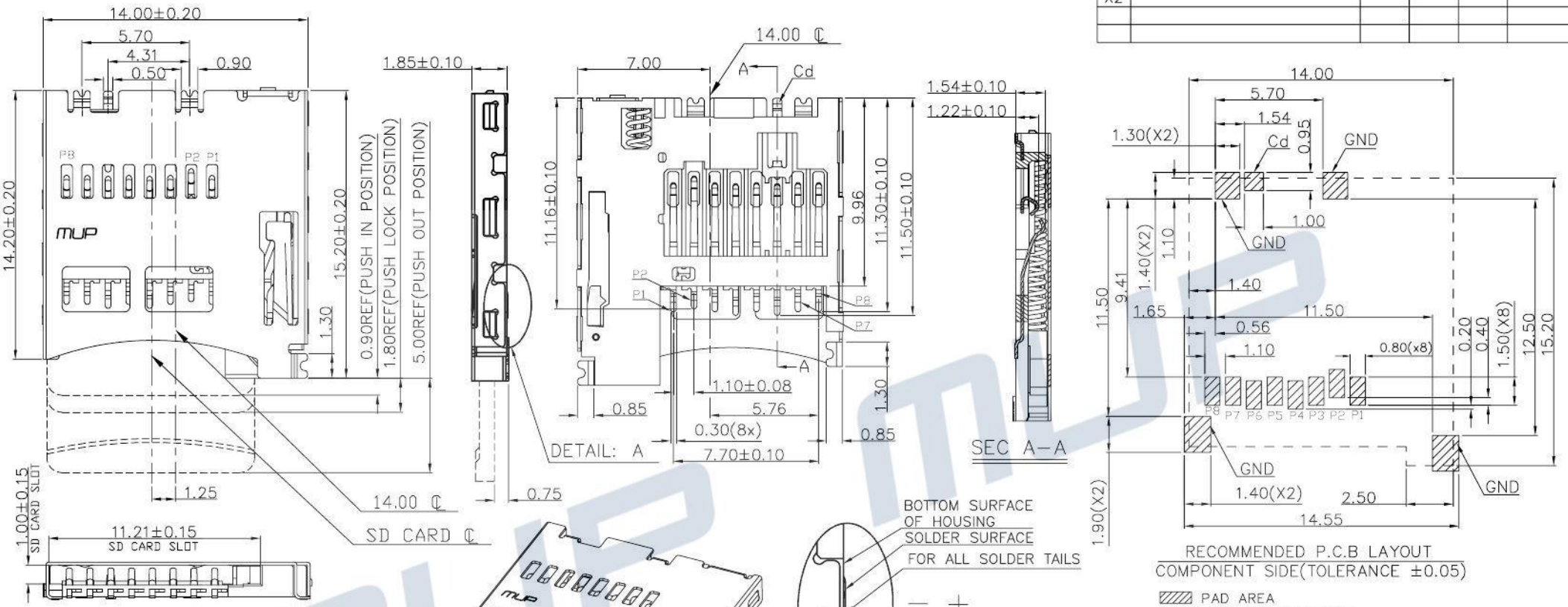

RECOMMENDED P.C.B LAYOUT
COMPONENT SIDE(TOLERANCE ±0.05)

▨ PAD AREA
⬚ CONNECTOR OUTLINE
⊠ NO PATTERN AND VIA HOLE IN THIS AREA

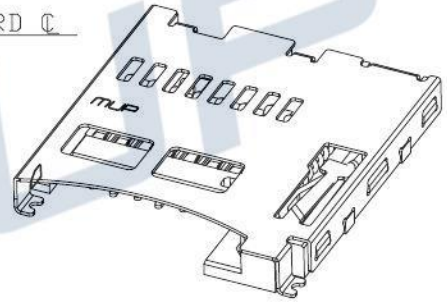

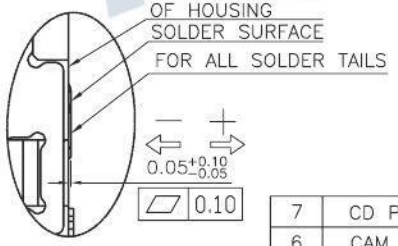

DETAIL A
SCALE 2:1

CIRCUIT DIAGRAM FOR DETECT SWITCHES

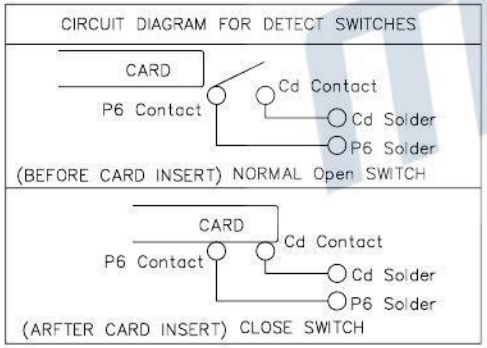

Pin No.	Pin assigenment	Pin No.	Pin assigenment
1	DAT2	5	CLK
2	CD/DAT3	6	VSS
3	CMD	7	DAT0
4	VDD	8	DAT1
Cd	CARD DETECION	GND	GROUND

TECHNICAL CHARACTERISTICS
1.General Characteristics
Dimensions:15.20LX14.0WX1.90H mm
Weight:Approx 0.5g
Durability:5,000 cycles min.
2.Electrical Characteristics
Contact resistance: 50mΩ typical,100mΩ max
Insulation resistance:>1000MΩ/500V DC
3.Solderability
Vapor phase:215°C,30sec.Max
IR reflow:260°C,10sec.Max
Manual soldering:370°C,3sec.Max
4.Environmental Characteristics
Operating temperature:−40°C~+85°C
Operating humidity:10%~+95%RH

Pb RoHS
PROCESS COMPLIANT

No.	DESCRIPTION	Q'TY	MATERIAL	FINISH
7	CD PIN	1	Copper Alloy	Contact area:Gold plated
6	CAM PIN	1	Stainless Steel	NO plating
5	HEART CAM	1	Hi-temp Thermoplastic	Black UL94V-0
4	SPRING	1	SWP.	Ni plating
3	SHELL	1	Stainless Steel	SMT area:Gold plated
2	TEMINAL	8	Copper Alloy	Contact area:Gold plated
1	HOUSING	1	Hi-temp Thermoplastic	Black UL94V-0

Unless otherwise specified, other tolerance are:

X ±0.35	X° ±5°		
X.X ±0.25	X.X° ±4°		
X.XX ±0.15	X.XX° ±3°		
X.XXX ±0.10	X.XXX° ±2°		

PROJ. | UNIT mm | SCALE 1:1

CUSTOMER DRAWING

® **MUP INDUSTRIAL CO.,LTD.**

NAME: **MicroSD CARD CONNECTOR**
MODEL NO: **MUP-M615**
TYPE : **With CD PIN**

DRAWN
CHECKED
APPROVAL

DWG NO.: DWG-M615-001
SHEET 1/1 | REVISION X1

mup mup