TIANGXI
COMPONENTS

APPROVAL SHEET

RoHS Compliant

CUSTOMER:	MINYX servis s.r.o.
DESCRIPTION:	SMD3.2*1.5 32.768KHz Quartz Crystal Resonator
MANUFACTURER PART NO.:	Q 32.768kHz 10ppm 10pF -40~+85°C
CUSTOMER PART NO:	
USED IN MODEL:	
REVISION	A1

承　　认　　APPROVAL		
工程部 TECHNOLOGY DEPT.	品质部 QUALITY DEPT.	采购部 PURCHASING DEPT.

Date: May 28, 2021

Rev	Revise page	Revise contents	Date	Ref.No.	Reviser
A1	ALL	Initial released		N/A	DavidJiang

1. QUARTZ CRYSTAL UNIT SPECIFICATION

1.1 Frequency:	32.768KHz
1.2 Holder type :	SMD3.2×1.5×0.8 mm
1.3 Frequency tolerance:	±20ppm at 25℃
1.4 Equivalent resistance:	70Kohms Max
1.5 Operating temperature range:	-40℃ To +85℃
1.6 Storage temperature range:	-55℃ To +125℃
1.7 Temperature Coefficient	-0.04×10^{-6}/ ℃^{2} max
1.8 Turn-over temperature::	+25℃±5℃
1.9 Loading capacitance (CL) :	12.5pF
1.10 Drive level:	0.5uW max
1.11 Shunt Capacitance:	1.0pF Typical
1.12 Motional Capacitance:	3.4fF Typical
1.13 Insulation resistance :	More than 500M ohms
1.14 Aging:	±3 ppm/Year Max Ta=+25℃±3℃，first year
1.15 Dimensions and marking	Refer to page.3
1.16 Emboss carrier tape & reel	Refer to page.5 and page.6
1.17 Note	

2. DIMENSIONS (Unit: mm)

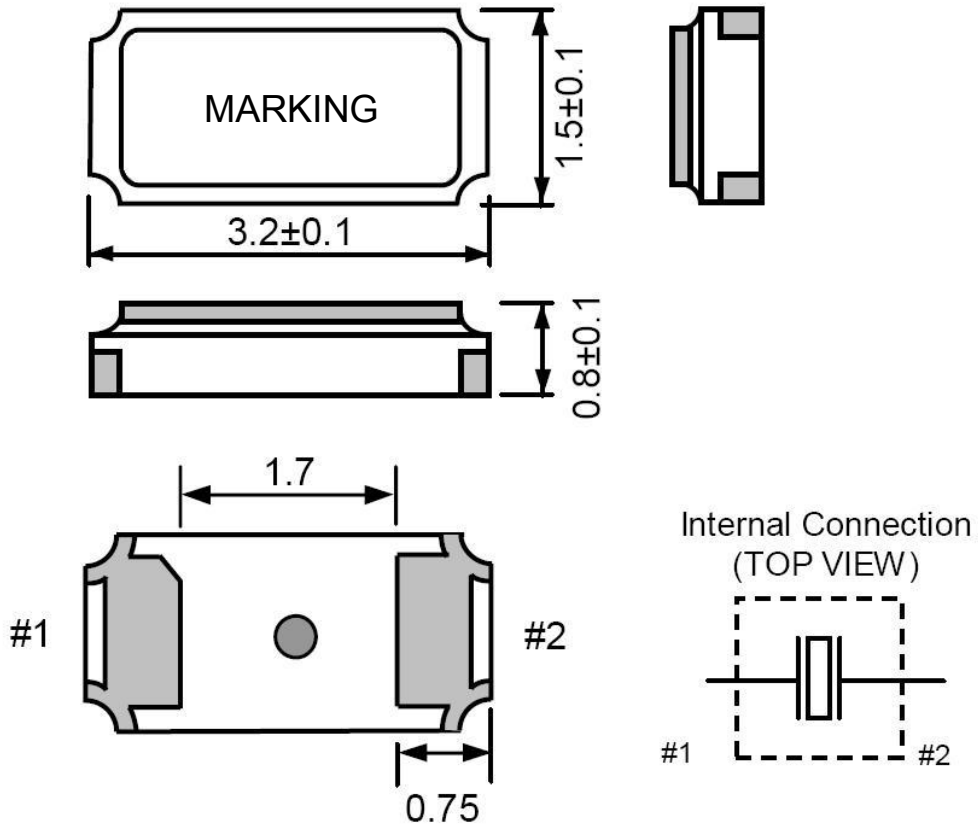

TIANGXI COMPONENTS CO.，LTD.		
DESCRIPTION	SMD3.2×1.5　32.768KHz　±20ppm 12.5pF	Page:
DATE	2021-05-28	4 / 9

3 CARRIER TAPE & REEL

a.) Dimensions of Carrier Tape

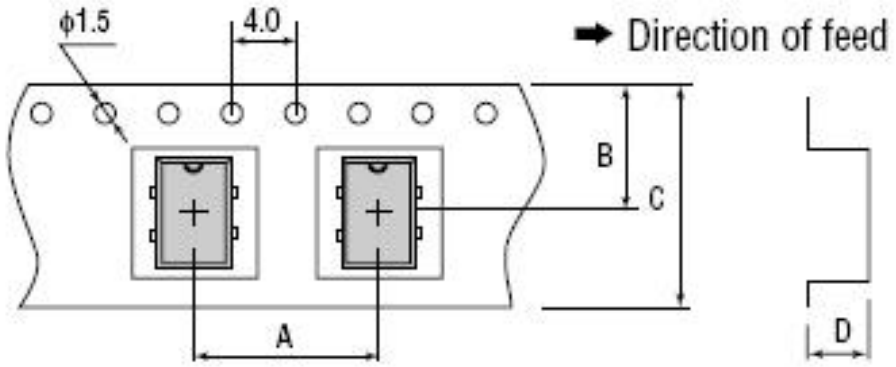

Dimension (Unit: mm)			
A	B	C	D
4.0	7.25	12.0	1.0

b.) Dimensions of Reel

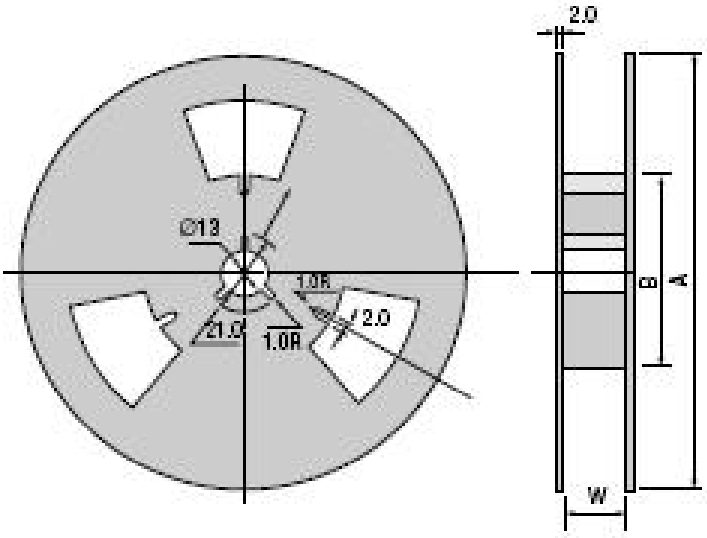

Dimension (Unit: mm)		
A	B	W
Φ180	Φ60	13.0

a.) Storage condition

Temperature: -55deg.C To +125deg.C

Relative Humidity: 80% Max.

b.) Standard packing quantity

3,000PCS / REEL

c.) Material of the tape

Tape	Material
Carrier tape	A- PET
Top tape	Polyester

d.) Label contents

.The type of product

.Our specification No.

.Your Part No.

.Lot No.

.Nominal Frequency

.Quantity

.Our Company Name

Sticks label for every reel.

PART NUMBER	
Lot. NO:	
HOLDER TYPE	
FREQUENCY	
REMAKS	
QUANTITY	
TIANGXI COMPONENTS CO.，LTD.	

e.) Taping dimension

Leader	Cover-tape	The length of cover-tape in the leader is more than 400 mm including empty embossed area.
	Carrier-tape	After all products were packaged, must remain more than twenty pieces or 400 mm empty area, which should be sealed by cover-tape.
Terminal	Cover-tape	The tip of cover-tape shall be fixed temporary by paper tape and roll around the core of reel one round.
	Carrier-tape	The empty embossed area which are sealed by top cover-tape must remain more the 40 mm.

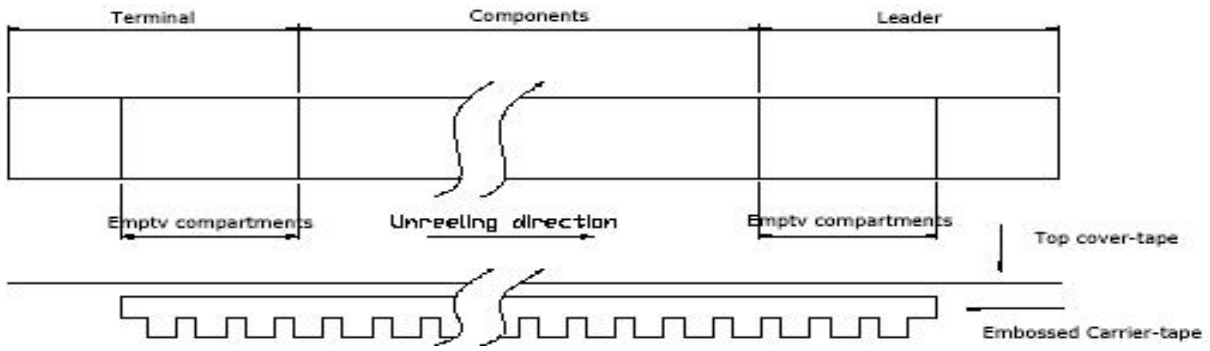

f.) Joint of tape

The carrier-tape and top cover-tape should not be jointed.

g.) Release strength of cover tape

It has to between 0.1N to 0.7N under following condition.

Pulling direction 165° to 180°

Speed 300mm/min.

Otherwise unless specified.

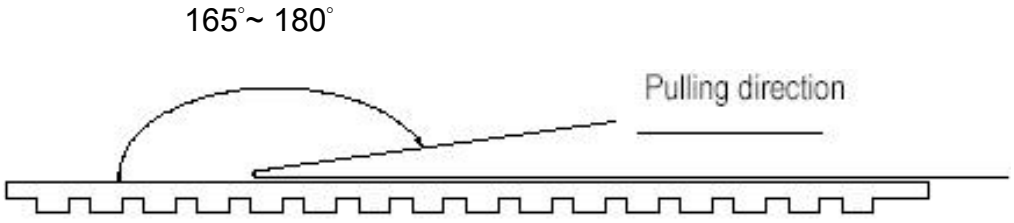

Other standards shall be based on JIS C 0806-1990.

4. Mechanical Endurance: Provided that measurement shall be carried out afterletting it alone in the room temperature for 1 hour.

	Test Item	**Condition of Test**	**Performance Requirements**
4.1	Shock (Destructive)	Resonator shall be tested after 3 times random drops from the height of 75 cm onto hard wooden broad of thickness more than 30 mm.	No visible damage, measured Values shall meet Table 1.
4.2	Vibration (Destructive)	Subject resonator to following vibration Frequency: 10-55Hz Amplitude: 0.75mm Cycle time: 1~2min(10-55-10Hz) Duration: 3 mutually perpendicular Planes in each 2 hours Direction: X, Y, Z	No visible damage, measured Values shall meet Table 1.
4.3	Terminal Strength (Destructive)	Pulling: body of resonator shall be fixed, and 0.5kg of tension weight shall be supplied gradually to axial direction of lead terminals for 30 seconds	The lead shall not be broken , measured Values shall meet Table 1.
		Bending: body of resonator shall be fixed, And 90℃ bending at a distance of 2.5±0.5 mm from crystal main body shall be given being supplied 250g tension weight. after that, lead terminals shall be straightened gradually. Then, the same bending and straightening shall be supplied to the opposite direction in the same axial.	
4.4	Solder Heating (Destructive)	Each lead terminals shall be dipped into the solder melted tank at 350±10℃ for 3±0.5 resonator ,and at 260±10℃ for 10 ± 1 seconds by the same way.	No visible damage, measured Values shall meet Table 1.
4.5	Solder DIP. (Destructive)	Dip the lead in liquid solder for 2± 0.5 seconds, at 230±5 ℃ and 6.0mm from the root , after this dipping , 90% min. of dipped parts shall be covered with solder.	No visible damage, measured Values shall meet Table 1.
4.6	Leakage (non-destructive)	The resonator is to be soaked in the alcohol and enforced with the pressure of 25N/cm^2 for 5 minutes Next , the resonator shall be tested after being taken out and dried with a dryer.	The Ir between the wire and the shell must be more than 500MΩ.

5. Environmental Endurance: Provided that measurement shall be carried out afterletting it alone in the room temperature for 1 hour.

	Item	Conditions	Specifications
5.1	Humidity	Should be satisfied after letting it alone at +60℃±2℃ in humidity of 85% ± 5% for 240 hours.	No visible damage, measured Values shall meet Table1.
5.2	Storage in Low Temperature	Should be satisfied after letting it alone at -30℃±2℃for 240 hours.	No visible damage, measured Values shall meet Table1
5.3	Storage in High Temperature	Should be satisfied after letting it alone at +85℃±2℃ for 240 hours.	No visible damage, measured Values shall meet Table1
5.4	Temperature Cycle	Should be satisfied after supplying the following temperature cycle (10 cycles). (Refer to Fig-4). Temperature shift from low to high, high to low shall be done in 1℃ /min.	No visible damage, measured Values shall meet Table1

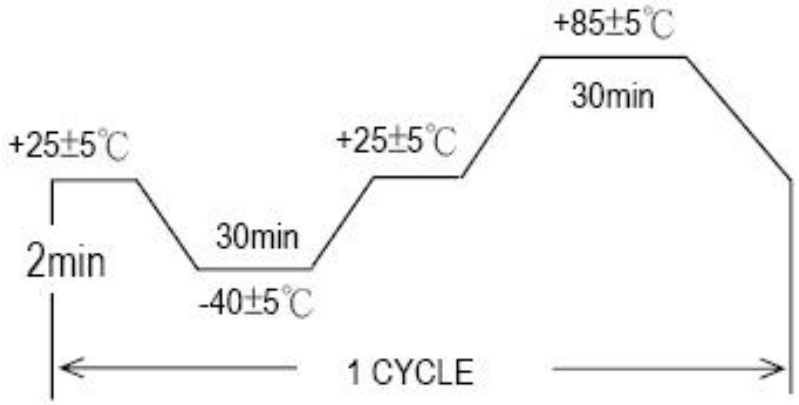

Fig-4

Table 1

Test Item	Specification	Note
Frequency change (△f/fo)	±5ppm	Reference to the initial value
C.I. (△R)	15%	Reference to the initial value