SAMPLE APPROVAL

Model No.: MUP C710-3

Revision: 1.0

Issue Date: Oct.10.2013

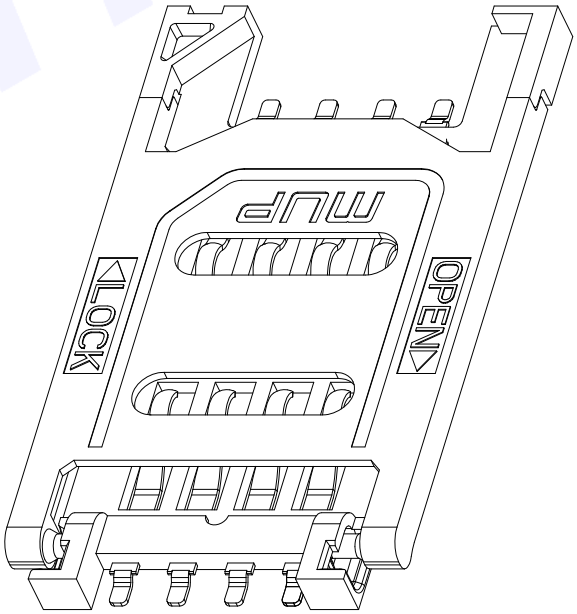

MUP INDUSTRIAL CO., LTD

LingWu Industrial Park, Junzibu, Guanlan Street, Baoan District Shenzhen,China

TEL: 0755-29673656/57/58 **FAX: 0755-29673655**

E-Mail: sales@mupconnector.com **URL: Http:// www.mupconnector.com**

 All Rights Reserved.
All specifications and details published are subject to change without notice.
Please don't reproduce or copy by any means.

TABLE OF CONTENTS

1 INTRODUCTION

1.1 General

1.2 Features

1.3 Applications

2 TECHNICAL CHARACTERISTICS

2.1 General Characteristics

2.2 Electrical Characteristics

2.2.1 Data contact

2.3 Mechanical Characteristics

2.4 Solder ability

2.5 Environmental Characteristics

3 INTERFACE

3.1 Signal Interface

3.2 SIM Card Contact Location(GSM11.11)

3.3 Recommended IR Reflow Condition

4 MECHANICAL OUTLINE DRAWING

5 PACKING INFORMATION

 All Rights Reserved.
All specifications and details published are subject to change without notice.
Please don't reproduce or copy by any means.

1. INTRODUCTION

1.1 General

The C710 is in strict accordance with GSM11.11 international recognized standard，It is designed for high performance and flexibility to give prospective customers a quick applications of the individual devices in their product series, Other kinds of models are optional, You need is our goal.

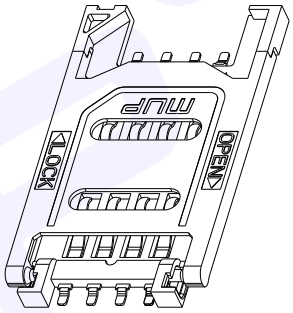

1.2 Features

- GSM11.11 Standard SIM Card
- Fast reaction capacity
- Broad application domain
- The superior performance
- Ideal stable performance

1.3 Applications

- Access Control Terminal
- Terminal identification module
- Telecommunication
- Handset
- Grasps pos machine
- Memory dense spoon management special-purpose
- Other Identification recognition

MUP INDUSTRIALCO., LTD. All Rights Reserved.
All specifications and details published are subject to change without notice.
Please don't reproduce or copy by any means.

2. TECHNICAL CHARACTERISTIC

2.1 General Characteristics:

No.	Items	Standard	Descriptions
1	Dimensions		29.65LX17.20WX2.00H mm
2	Weight		Approx. 0.76±0.2g
3	Card size	GSM11.11	25.0×15.0×0.76mm
4	Contact principle		Friction technology
5	Mounting System		SMT(Without Post)
6	Durability		5,000 cycles Min.
Material			
1	Insulator		Thermoplastic UL94V-0
2	Contact		Phosphor bronze
3	Plating		Gold over nickel

2.2 Electrical Characteristics: according to standard IEC512

2.2.1 Data Contact

No.	Items	Standard	Descriptions
1	Number of Contacts		8 Pins
2	Contact highly		1.00±0.20mm
3	Insulation resistance pin to pin	IEC512-2-3a	>1000 MΩ/500 VDC
4	Rated voltage		50V max
5	Rated current		1A max., 10μA min.
6	Contact resistance	IEC512-2-2a	50 mΩ typical, 100mΩ max.
7	Dielectric withstanding voltage	IEC512-2-4a	500V AC rms 1min.(sea level)

 All Rights Reserved.
All specifications and details published are subject to change without notice.
Please don't reproduce or copy by any means.

2.3 Mechanical Characteristics:

No.	Items	Standard	Descriptions
1	Contact force		0.5~ 1.2N
2	Contact location	GSM11.11	

2.4 Solder ability:

No.	Items	Standard	Descriptions
1	Wave	IEC-68-2-20	Not applicable.
2	Vapor phase		215℃, 30sec.Max
3	IR re-flow		250℃, 5 sec.Max
4	Manual	IEC-68-2-20	370℃, 3 sec.Max.

2.5 Environmental Characteristics

No.	Items	Standard	Descriptions
1	Operation temperature		-40℃ ~ +85℃
2	Operating humidity		10% ~ 95%RH
3	Storage temperature		-40℃ ~ +85℃,
4	Storage humidity		10% ~ 95%RH
5	Thermal shock	IEC68-2-14	-40℃ ~ +85℃,5 cycles
6	Damp heat	IEC68-2-3	40℃,90%RH,500HR.
7	Salt-mist	IEC68-2-11	35℃,5% NaCl, 24HR

MUP INDUSTRIALCO., LTD. All Rights Reserved.
All specifications and details published are subject to change without notice.
Please don't reproduce or copy by any means.

3. INTERFACE

3.1 Signal

Signal interface connections for C710 are shown below.

Contact No.	Assignment	Description	Remark
C1	Vcc	Power Voltage	
C2	RST	Reset Signal	
C3	CLK	Clock Signal	
C4	RFU	Reserve for future use	
C5	GND	Power and Signal Ground	
C6	Vpp	Programming Voltage	
C7	I / O	Serial Data input/ output	
C8	RFU	Reserve for future use	

3.2 SIM Card Contact Location(GSM11.11)

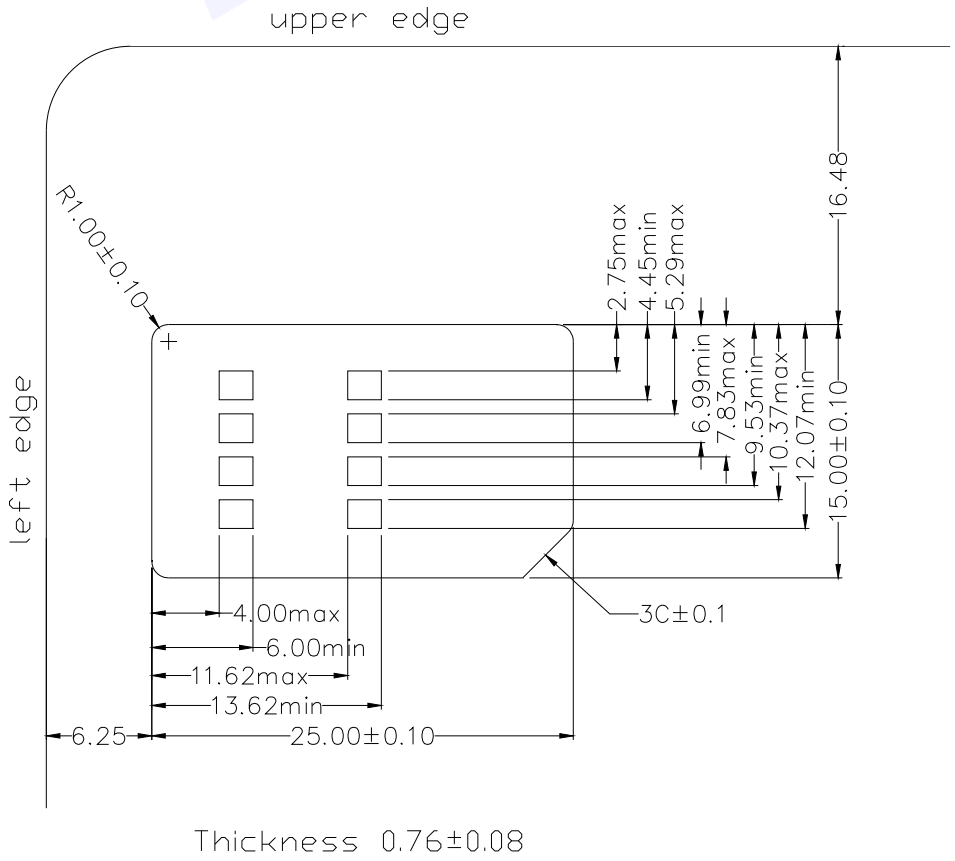

 All Rights Reserved.
All specifications and details published are subject to change without notice.
Please don't reproduce or copy by any means.

3.3 Recommended IR Reflow Condition

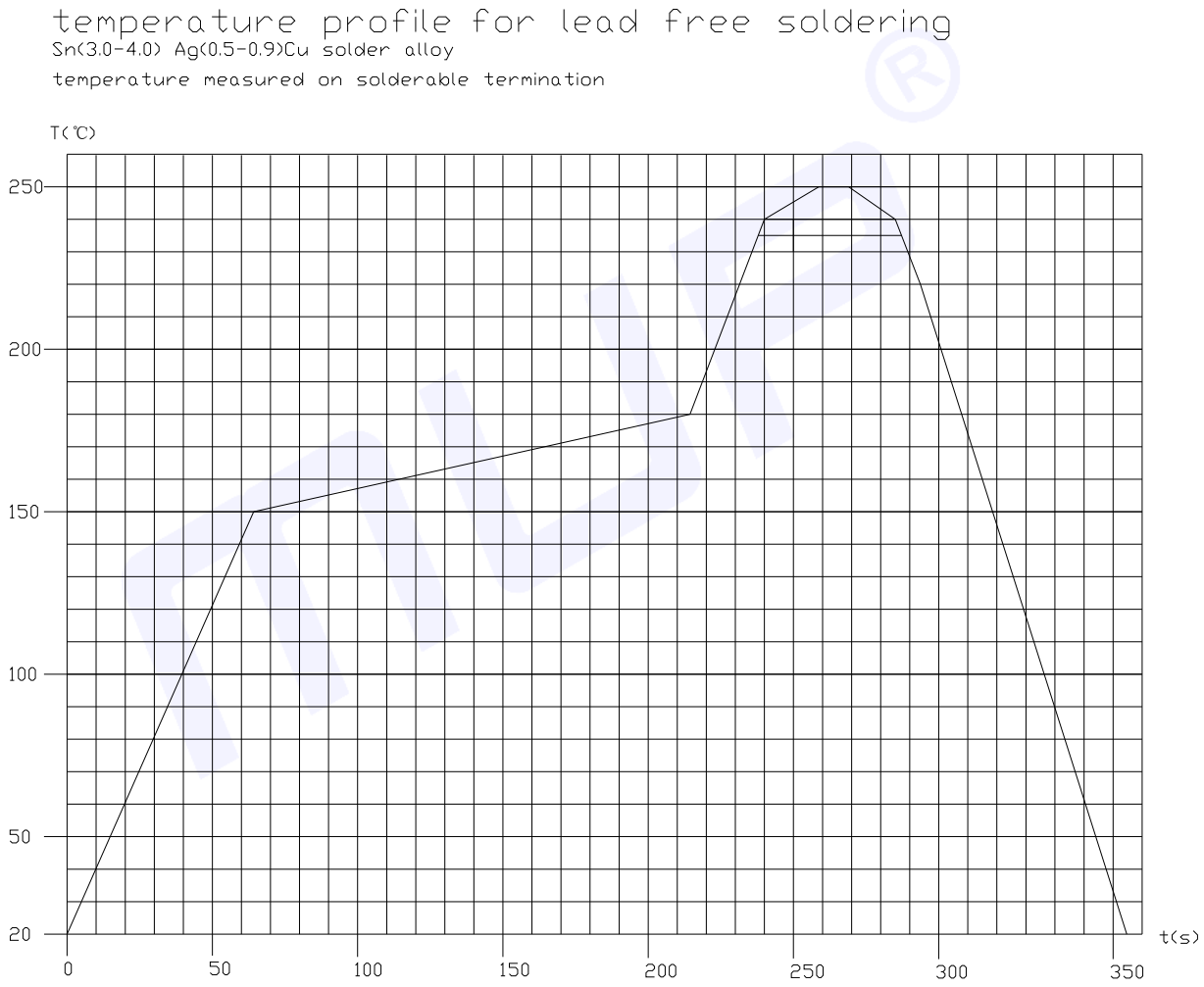

Parameter	Specification
Average temperature gradient in preheating	2.5 ℃/s
Preheating temperature	150℃~200℃
Soak time	120s~180s
Time above 217℃	40s~120s
Peak temperature in reflow	235℃~250℃
Time at peak temperature	10s~50s
Temperature gradient in cooling	Max-5℃/s

 All Rights Reserved.
All specifications and details published are subject to change without notice.
Please don't reproduce or copy by any means.

4. MECHANICAL OUTLINE DRAWING

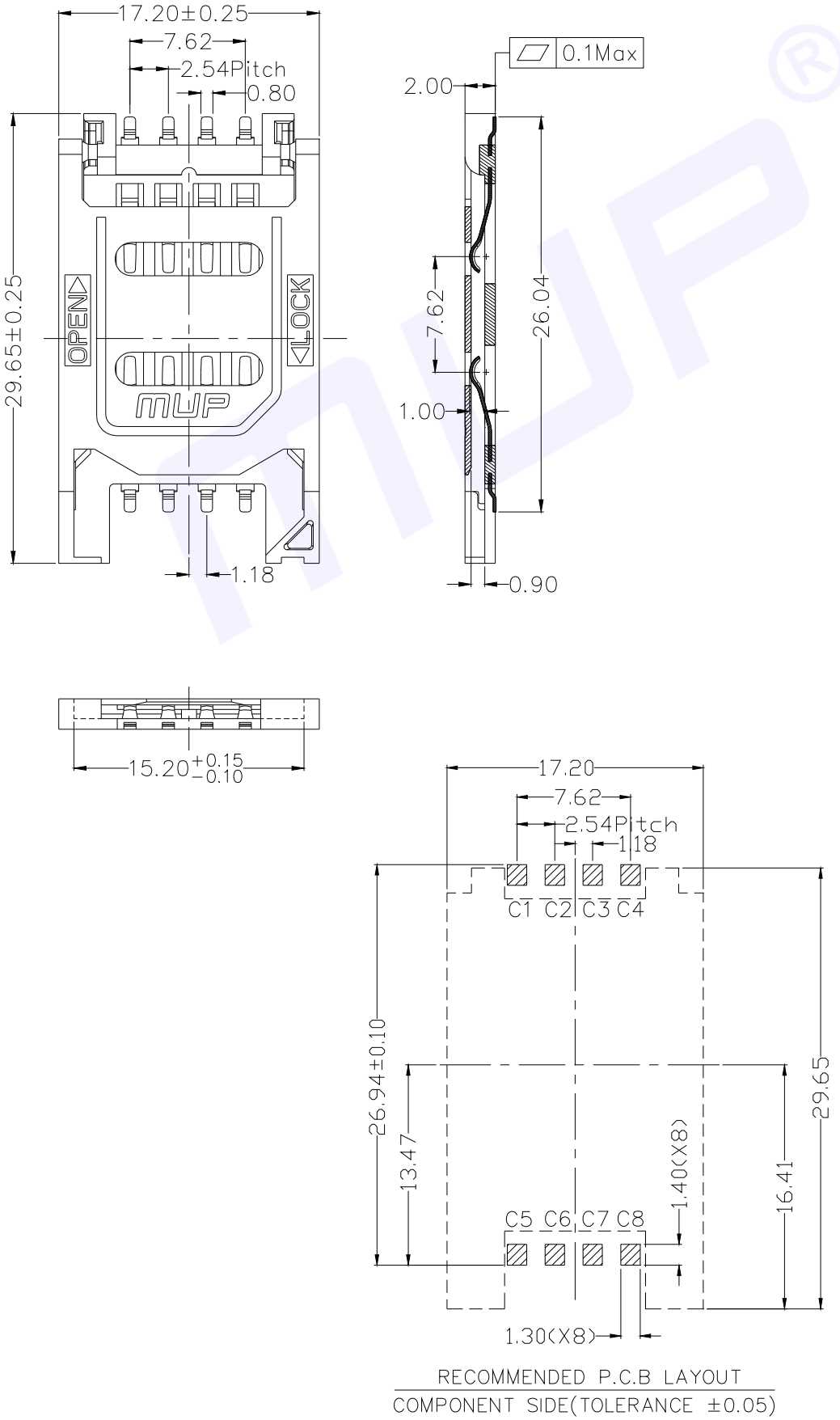

 All Rights Reserved.
All specifications and details published are subject to change without notice.
Please don't reproduce or copy by any means.

5. PACKING INFORMATION

5.1 Tape carrier packing information

5.1.1 Carrier Dimensions Diagram

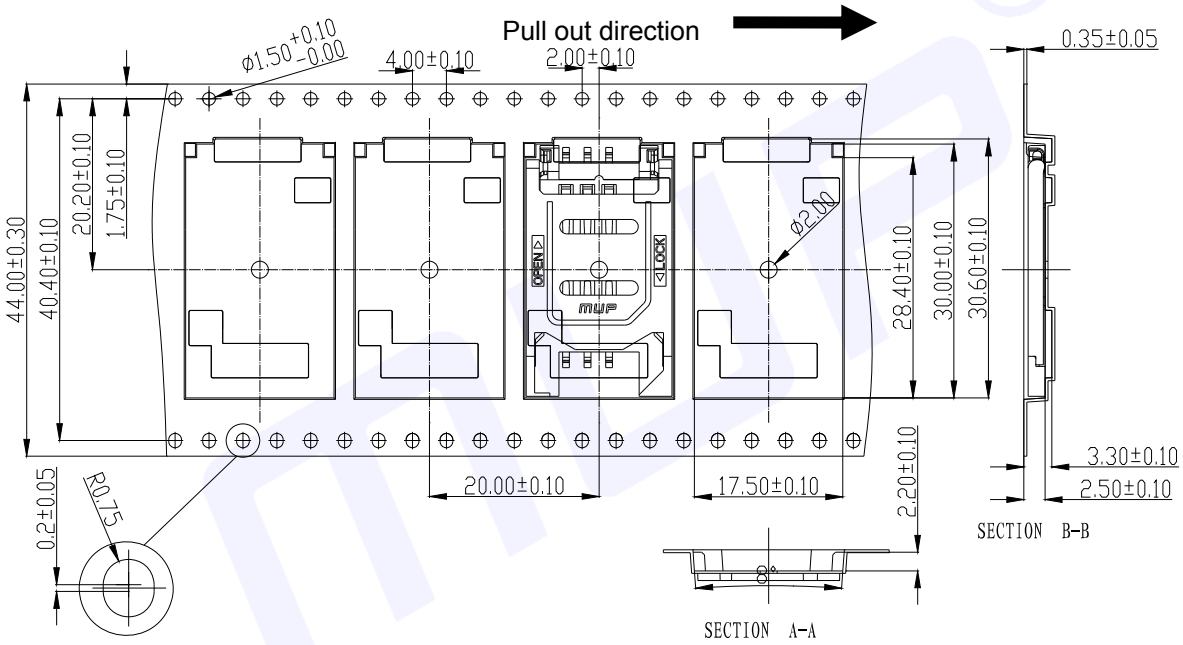

5.1.2 Reel Form Diagram

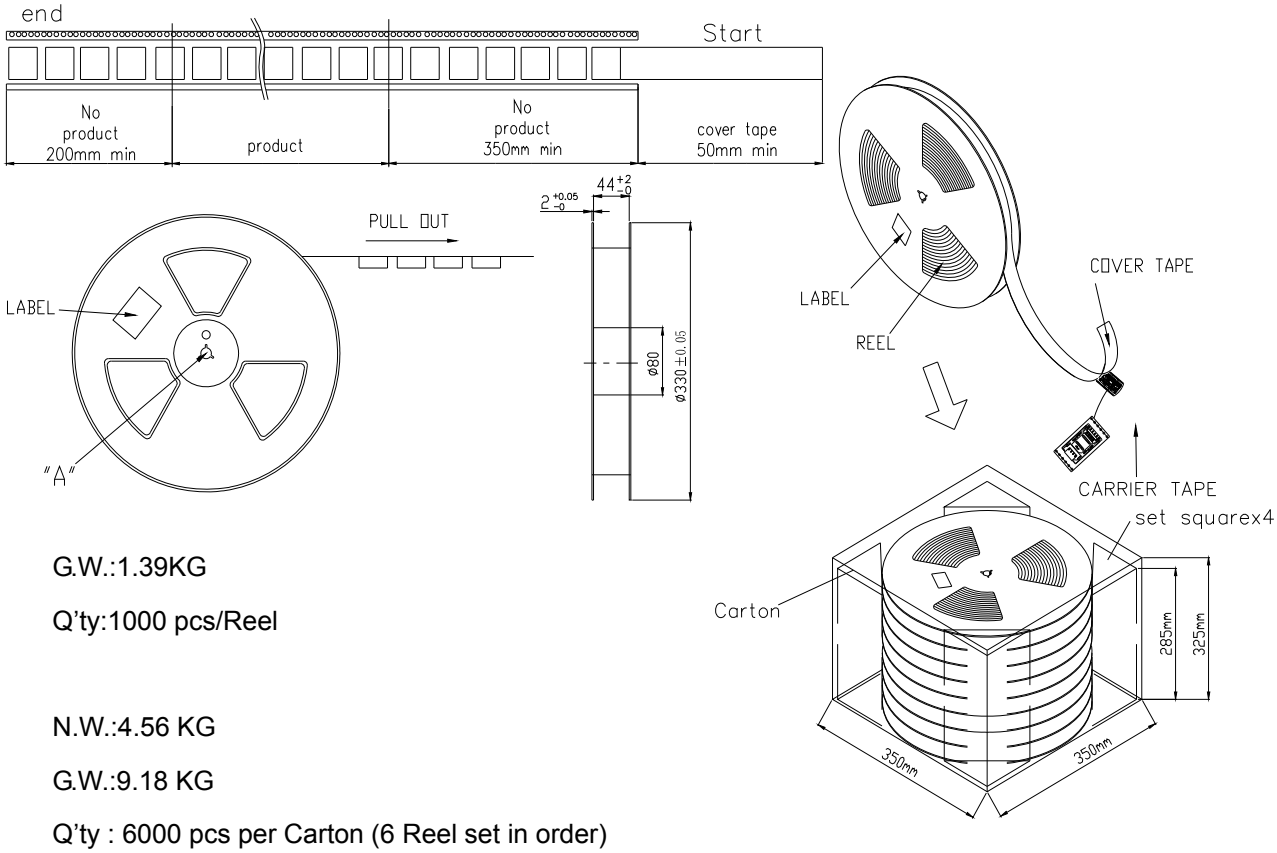

G.W.:1.39KG

Q'ty:1000 pcs/Reel

N.W.:4.56 KG

G.W.:9.18 KG

Q'ty : 6000 pcs per Carton (6 Reel set in order)

Meas : 35.00L×35.00W×31.50H cm

MUP INDUSTRIALCO., LTD. All Rights Reserved.
All specifications and details published are subject to change without notice.
Please don't reproduce or copy by any means.