REV.	DESCRIPTION OF REVISIONS	APPR.	DRAW.	RELEASE	DATE
X1	Ooriginal reversion				

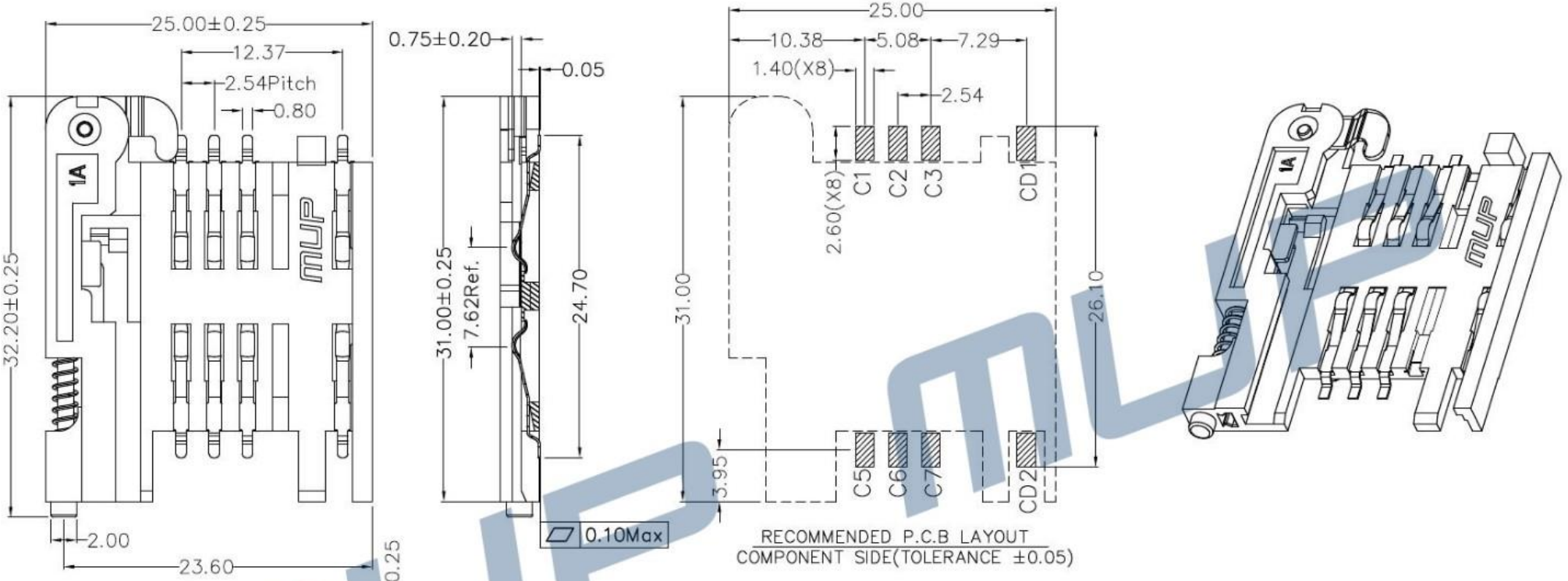

TECHNICAL CHARACTERISTICS

1.General Characteristics

Dimensions: 32.20LX25.00WX3.00H mm
Weight: Approx1.60±0.20g
Durability: 5,000 cycles min.

2.Electrical Characteristics

Contact resistance: 50mΩ typical,100mΩ max
Insulation resistance: >1000MΩ/500V DC

3.Solderability

Vapor phase: 215°C,30sec.Max
IR reflow: 250°C,5sec.Max
Manual soldering: 370°C,3sec.Max

4.Environmental Characteristics

Operating temperature: −40°C~+85°C
Operating humidity: 10%~+95%RH

ELECTRIC FUNCTION	DETECT SWITCH
WITHOUT CARD	OPEN
CARD INSERTED	CLOSED

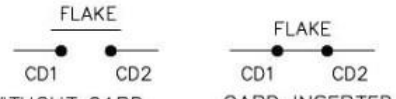

SWITCH OPERATION DIAGRAM

ITEM	PART NAME	Q'TY	MATERIAL	FINISH
1	BASE	1	Hi-temp Thermoplastic	Black UL94V-0
2	DATA CONTACT	8	Copper Alloy	Contact area: Gold plated
3	HANDLE	1	Hi-temp Thermoplastic	Yellow UL94V-0
4	SPRING	1	SWP	
5	POLE	1	Stainless Steel	
6	AXIS	1	Copper Alloy	Ni plated over all
7	TOGGLE LEVER	1	Stainless Steel	

Unless otherwise specified, other tolerance are:

X	±0.35	X°	±5°
X.X	±0.25	X.X°	±4°
X.XX	±0.15	X.XX°	±3°
X.XXX	±0.10	X.XXX°	±2°

MUP® MUP INDUSTRIAL CO.,LTD.

NAME:	SIM Card Connector
MODEL NO:	MUP C716-3
TYPE :	without post 6p

PROJ.	UNIT	SCALE
	mm	1:1

CUSTOMER DRAWING

DRAWN	Zoey	Oct.10.2006
CHECKED	Jimmy	Oct.10.2006
APPROVAL	Jun	Oct.10.2006

DWG NO.: DWG-MUP-C716-003

SHEET 1/1 | REVISION X1

RoHS PROCESS COMPLIANT