X1	design modify		keey		2016.07.28
X2					
X3					
X4					

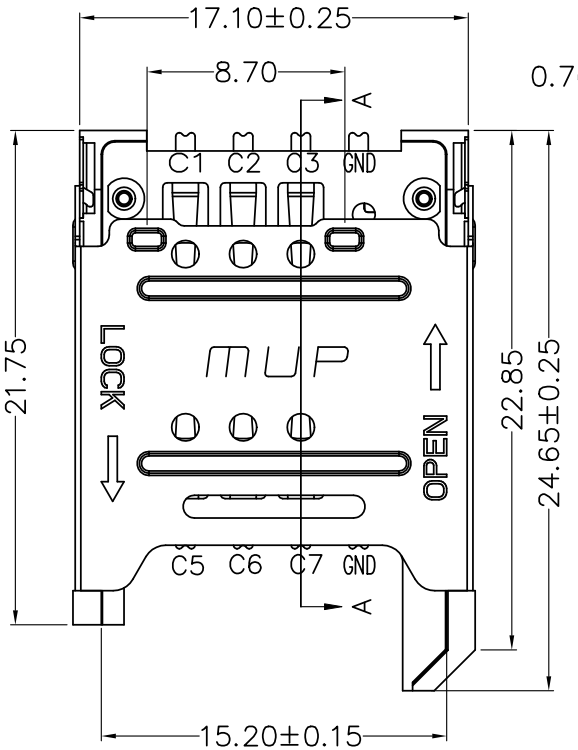

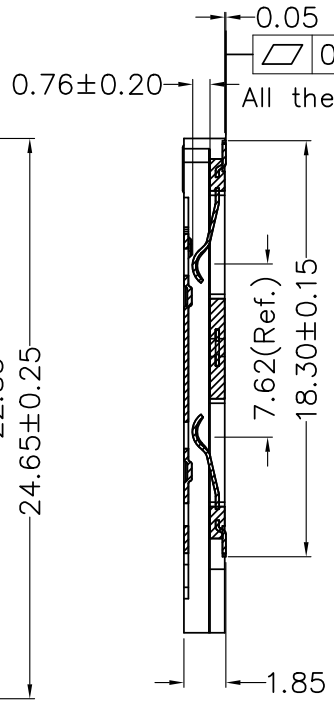

SECTION A-A

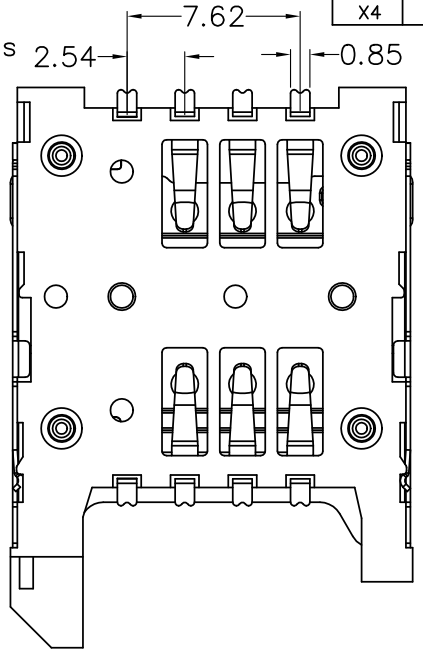

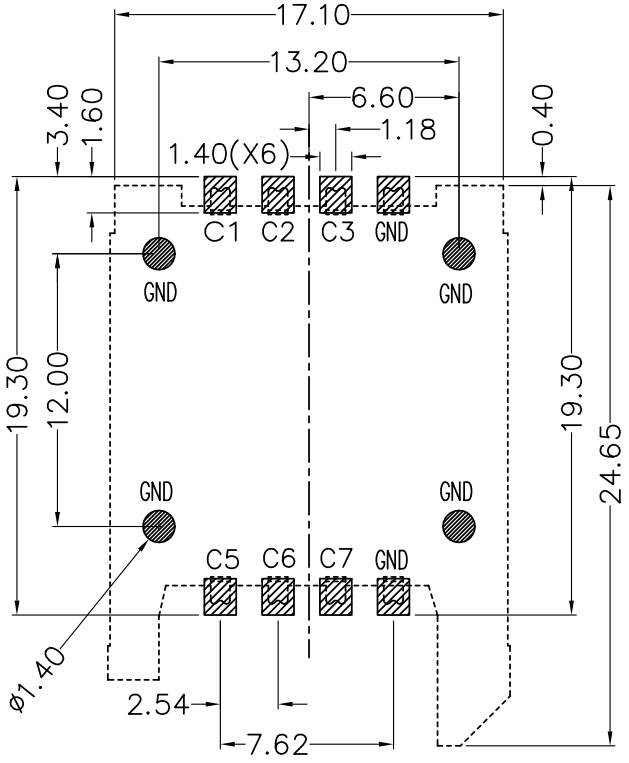

RECOMMENDED P.C.B LAYOUT
COMPONENT SIDE(TOLERANCE ±0.05)

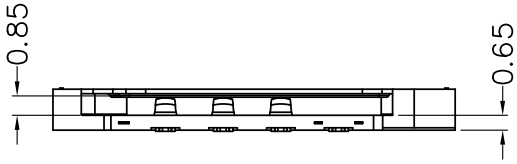

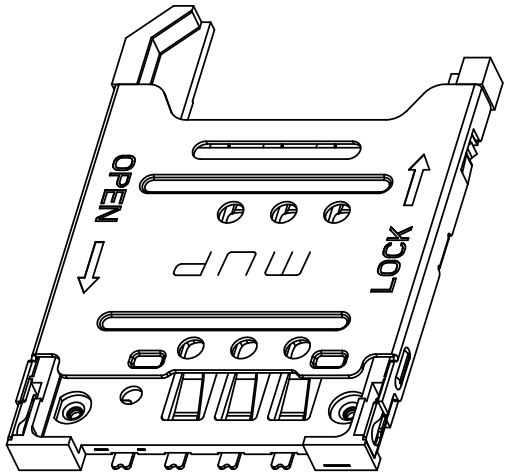

TECHNICAL CHARACTERISTICS

1.General Characteristics

Dimensions: 24.65LX17.10WX1.85H mm

Weight: Approx0.90±0.2g

Durability: 5,000 cycles min.

2.Electrical Characteristics

Contact resistance: 50mΩ typical,100mΩ max

Insulation resistance: >1000MΩ/500V DC

3.Solderability

Vapor phase: 215°C,30sec.Max

IR reflow: 250°C,5sec.Max

Manual soldering: 370°C,3sec.Max

4.Environmental Characteristics

Operating temperature: −40°C~+85°C

Operating humidity: 10%~+95%RH

ITEM	PART NAME	Q'TY	MATERIAL	FINISH
1	BASE	1	Hi-temp Thermoplastic	Black UL94V-0
2	SHELL	1	Stainless steel	
3	DATA CONTACT	6	Copper Alloy	Contact area:Gold plated

Unless otherwise specified, other tolerance are:

X	±0.35	X°	±5°
X.X	±0.25	X.X°	±4°
X.XX	±0.15	X.XX°	±3°
X.XXX	±0.10	X.XXX°	±2°

MUP® MUP INDUSTRIAL CO.,LTD.

NAME: SIM Card Connector

MODEL NO: MUP C717-3

TYPE : Without post 6p

PROJ.	UNIT	SCALE
	mm	1:1

DRAWN	Zoey	May.19.2017
CHECKED	Jimmy	May.19.2017
APPROVAL	Zoey	May.19.2017

DWG NO.: DWG-MUP-C717-003

SHEET 1/1 REVISION X1

CUSTOMER DRAWING

Pb RoHS PROCESS COMPLIANT