REV.	DESCRIPTION OF REVISIONS	APPR.	CHKD.	DRAW.	DATE
1	Original reversion	lucky	lucky	Roy	2019/01/05
2	Add product model	lucky	lucky	Roy	2020/03/19
3	Change product model No.	lucky	lucky	Roy	2023/10/25

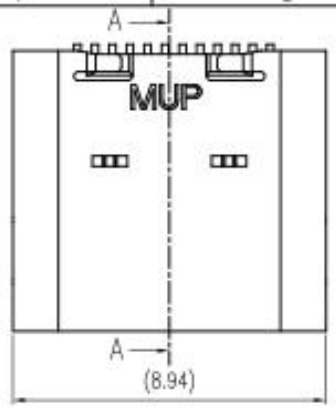

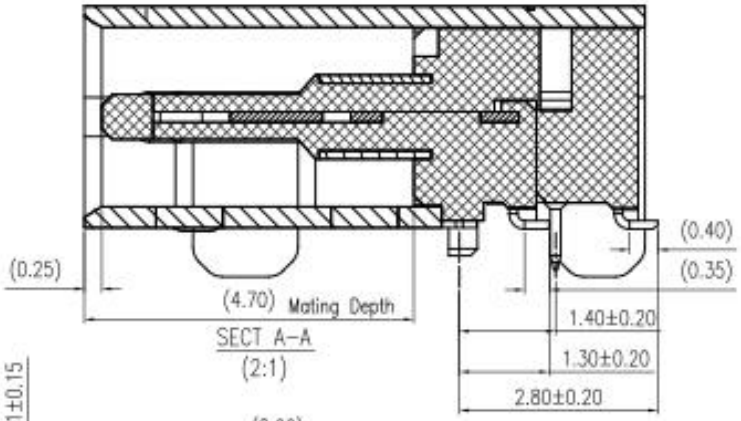

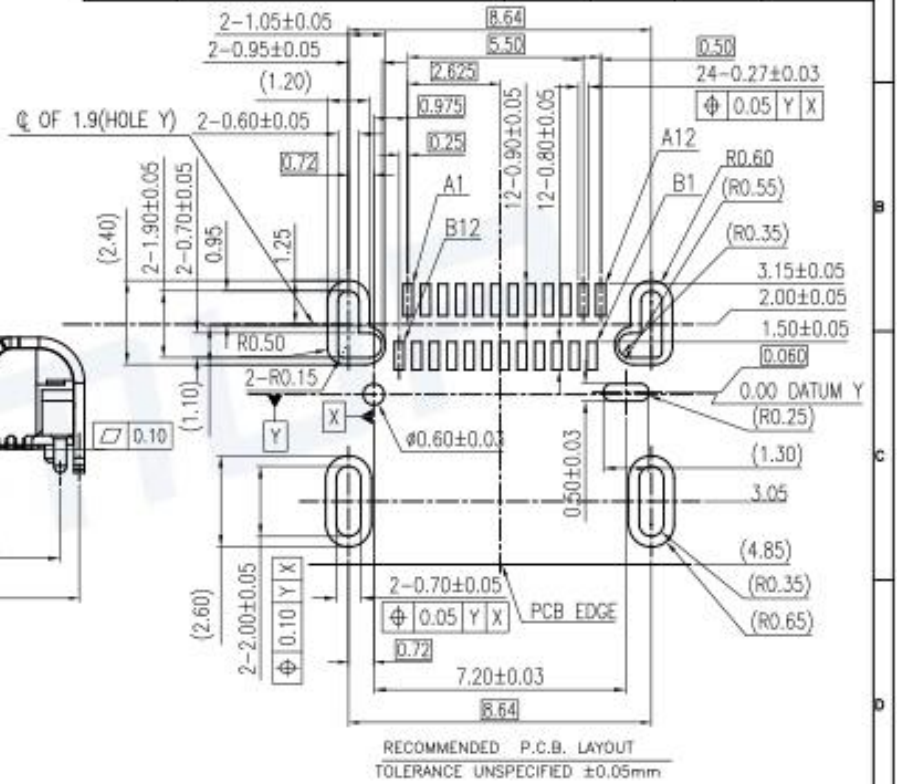

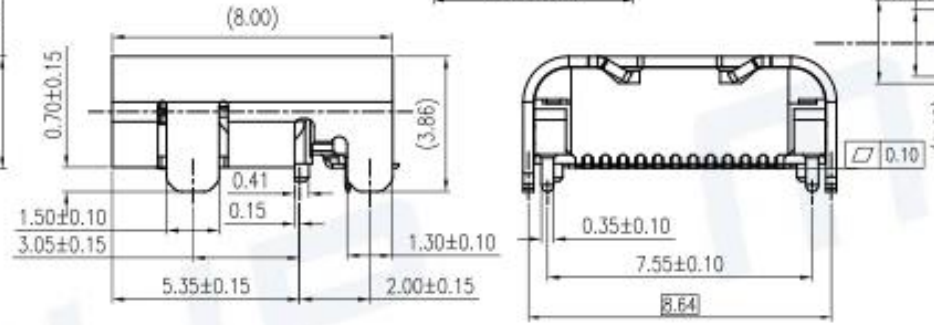

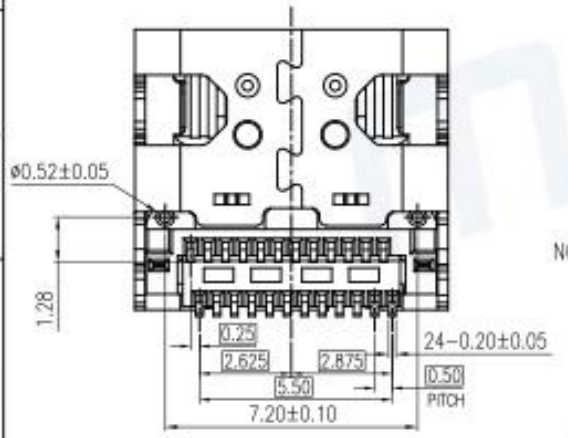

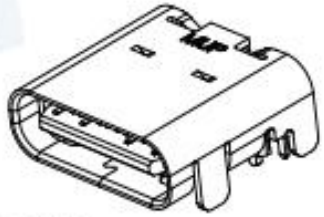

NOTE:
1. MECHANICAL:
   1-1.MATING FORCE: 0.5~2.0Kgf
   1-2.UMMATING FORCE: Initial: 0.8~2.0Kgf
   After 500 to 10,000cycles: 0.6~2.0Kgf
   1-3.FREQUENCE:500±50 CYCLES/HOUR,10000 CYCLES;
2. ELECTRICAL CHARACTERISTICS:
   2-1. CURRENT RATING:
   VBUS Pins (A4,A9,B4,B9): 5A Max;
   1.25 Amps MAX. for Vconn (B5) with return path through the corresponding GND pins(Pin A1, A12, B1, B12).
   Other All Pins 0.25A/Pin
   2-2. INITIAL CONTACT RESISTANCE:40mΩ Max.
   2-3. INSULATION RESISTANCE:100MΩ MIN
   2-4. WITHSTANDING VOLTAGE:100V AC,1 MINUTE;
5. ENVIRONMENTAL
   TEMPERATRUE RANGE: -40°C TO +85°C.

PIN	SIGNAL NAME	PIN	SIGNAL NAME
A1	GND	B12	GND
A2	SSTXP1	B11	SSRXP1
A3	SSTXN1	B10	SSRXN1
A4	VBUS	B9	VBUS
A5	CC1	B8	SBU2
A6	DP1	B7	DN2
A7	DN1	B6	DP2
A8	SBU1	B5	CC2
A9	VBUS	B4	VBUS
A10	SSRXN2	B3	SSTXN2
A11	SSRXP2	B2	SSTXP2
A12	GND	B1	GND

ITEM	PART NAME	Q'TY	MATERIAL	FINISH
1	Molding	1	THERMOPLASTIC	Black, UL94V-0
2	CONTACT	24	HIGH CONDUCTIVITY COPPER	Contact area: Au 3u"
3	SHELL	1	STAINLESS STEEL	Ni plated over all
4	MID-PLATE	1	STAINLESS STEEL	Ni plated over all
5	GND-PLATE	1	STAINLESS STEEL	RINSE

RoHS PROCESS COMPLIANT

Unless otherwise specified, other tolerance are:

X	±0.40	X°	±5°
X.X	±0.30	X.X°	±4°
X.XX	±0.20	X.XX°	±3°
X.XXX	±0.10	X.XXX°	±2°

PROJ. | UNIT mm | SCALE 1:1

CUSTOMER DRAWING

MUP® MUP INDUSTRIAL CO.,LTD.

NAME: USB Type C Dual-Row SMT Receptacle

MODEL NO: MUP-U20201-01

TYPE : 24P & USB 3.1 With GND-PLATE

DRAW	Roy	2019/01/05
CHECKED	lucky	2019/01/05
APPROVAL	lucky	2019/01/05

DWG NO.: DWG-U20201-01-01

SHEET 1/2 | REVISION 3