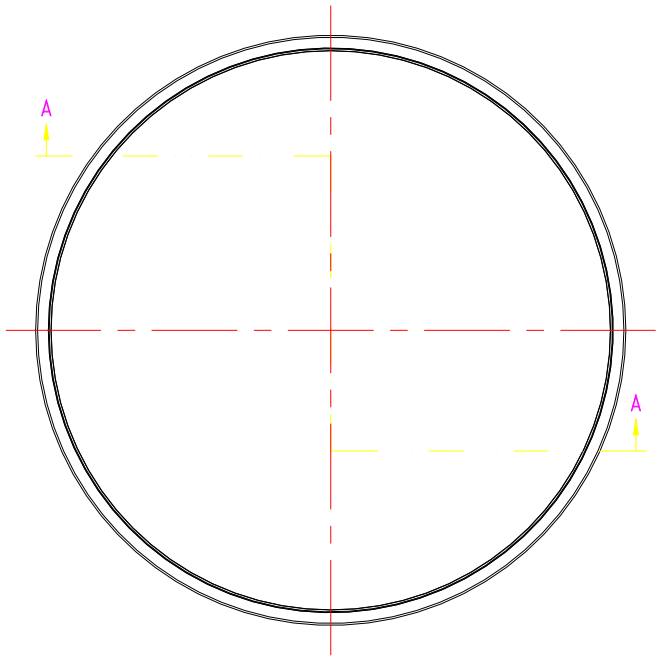

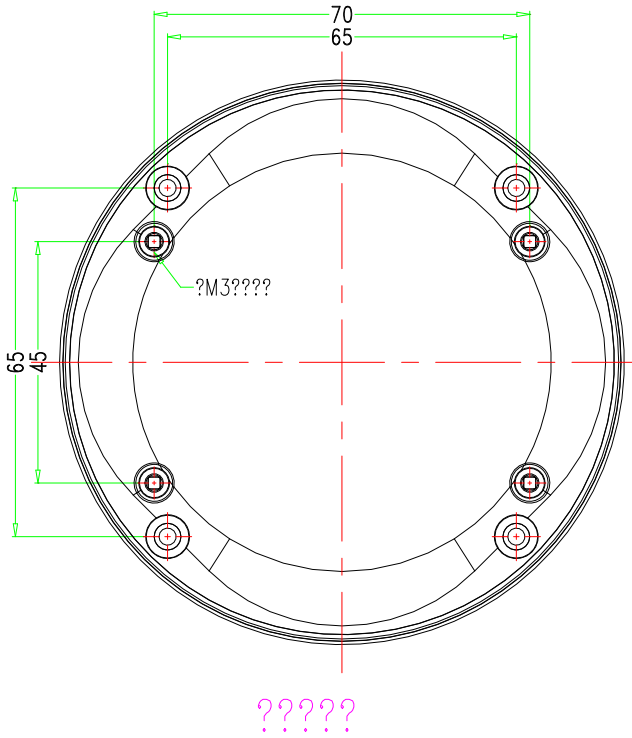

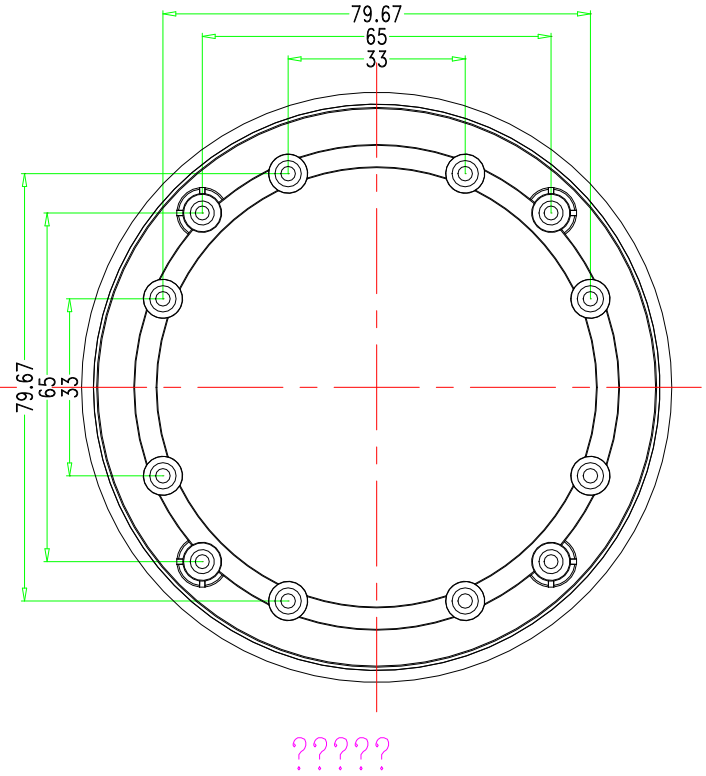

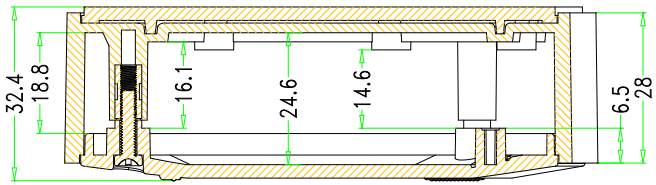

SEC A-A

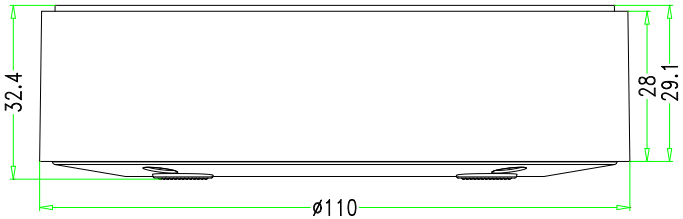

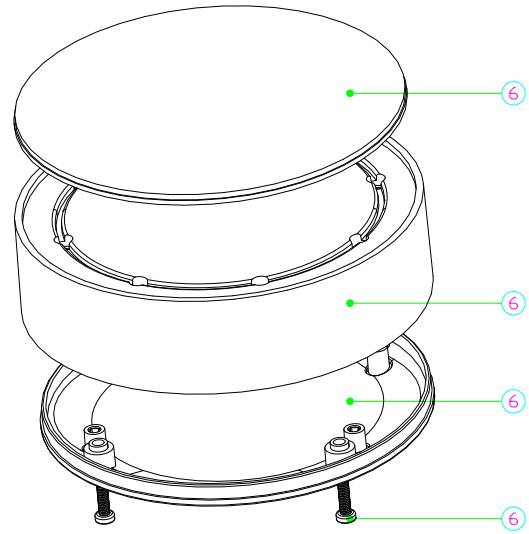

4	??PM3*12	?	4	*	
3	??	ABS	1	*	
2	??	ABS	1	*	
1	??	ABS	1	*	
? ?	????	? ?	? ?	????	? ?
? ? Drawing	? ? Auditing	? ? Confirm	???? Product Name	*	? ? Project View A
			???? Product Type BMD 60039		???? Drawing Scale 1:1(MM)

BAHAR ??????????? BEIJING BAHARTECHNOLOGY CO., LTD

????? TEL: +86-755-33262000 FAX: +86-755-33262020