TIANGXI
COMPONENTS

APPROVAL SHEET

RoHS Compliant

CUSTOMER:	MINYX servis s.r.o.
DESCRIPTION:	SMD7050 60.000MHz Quartz Crystal Oscillator
MANUFACTURER PART NO.:	QO 60.000MHz 50ppm 30pF -20~+70°C
CUSTOMER PART NO:	
USED IN MODEL:	
REVISION	A1

承　　认　　APPROVAL		
工程部 TECHNOLOGY DEPT.	品质部 QUALITY DEPT.	采购部 PURCHASING DEPT.

Date: January 2, 2019

Rev	Revise page	Revise contents	Date	Ref.No.	Reviser
A1	ALL	Initial released		N/A	DavidJiang

1. QUARTZ CRYSTAL OSCILLATOR SPECIFICATION

1.1 Frequency :	60.000MHz
1.2 Holder type :	SMD7050
1.3 Frequency stability :	±50ppm Overall Frequency stability is Inclusive of all conditions: Calibration Tolerance at +25℃, frequency stability over -20~+70℃, supply voltage change, output load changes, shock, vibration, and 1st year aging at +25℃.
1.4 Supply voltage :	$3.3V_{DC}$±10%
1.5 Input Current :	20mA max
1.6 Operable temperature range :	-20℃ To +70℃
1.7 Storage temperature range :	-55℃ To +125℃
1.8 Symmetry :	40~60% (at 50% VDC)
1.9 Rise& Fall Time :	7nS max
1.10 Output Load :	HCMOS 15pF Typical, 30pF max
1.11 Output Low Level :	$10\%V_{DD}$ max
1.12 Output High level :	$90\%V_{DD}$ min
1.13 Output Wave form :	Square
1.14 Tri-State :	Yes
1.15 Start-up Time :	10mS max
1.16 Aging :	Less than ±3 ppm/Year
1.17 Phase Jitter (12KHz~20MHz) :	1ps max
1.17 Insulation resistance :	500MΩ (DC100±10V)min
1.18 Output Waveform :	Refer to fig.1
1.19 Test circuit :	Refer to fig.2
1.20 Dimensions and marking :	Refer to page.3
1.21 Emboss carrier tape & reel :	Refer to page.5 and page.6

Standard atmospheric conditions

Unless otherwise specified, the standard range of atmospheric conditions for making measurement and tests are as follow:

Ambient temperature : 25±3℃

Relative humidity : 40%~70%

2. Output Waveform

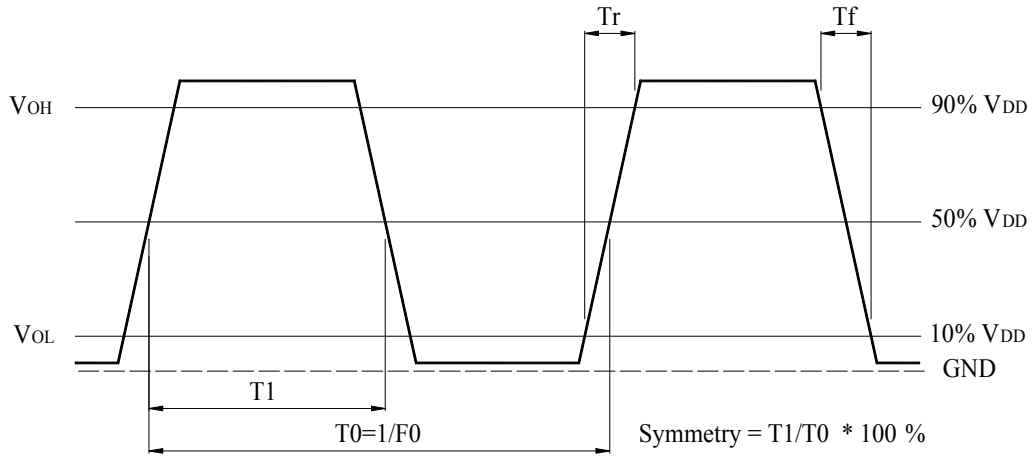

3. Test circuit

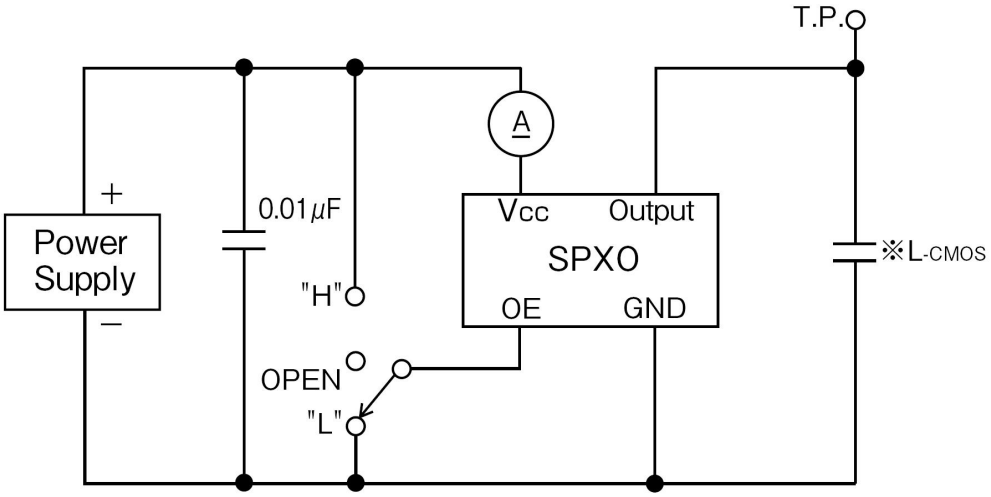

※L-CMOS: Total Fixture and Probe Capacitance

4. FXO751S MARKING & DIMENSIONS

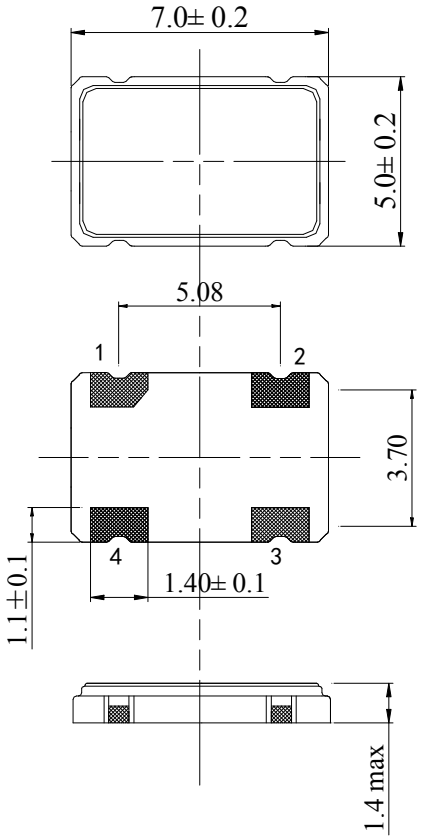

Pin	Connection
1	E/D
2	GND
3	Output
4	$+V_{DD}$

recommended
soldering pattern.

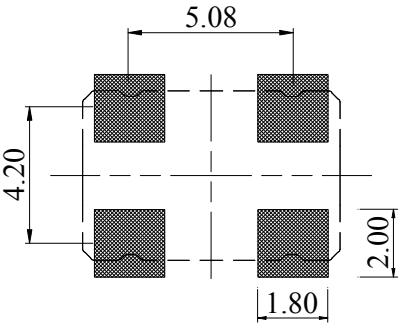

Reference drawing

Base: Alumina Ceramic (Al_2O_3) Metallized Pad: W Ni Plating Au Plating
Cap: Fe-Ni
(3) Crystal Enclosure Seal: Seal Seam
(4) Crystal Blank Rectangular At-Cut Quartz Crystal Blank
(5) Adhesive Silver Conductive Polyimide Resin
(6) Electrode Ag
(7)PAD Alumina Ceramic (W. Ni. Au)

The use prohibition chemistry substance of Table 1 of DHE-0204-1 (QA-QM-08) is not included in this item.

5. EMBOSS CARRIER TAPE & REEL

a.) Dimensions of Carrier Tape

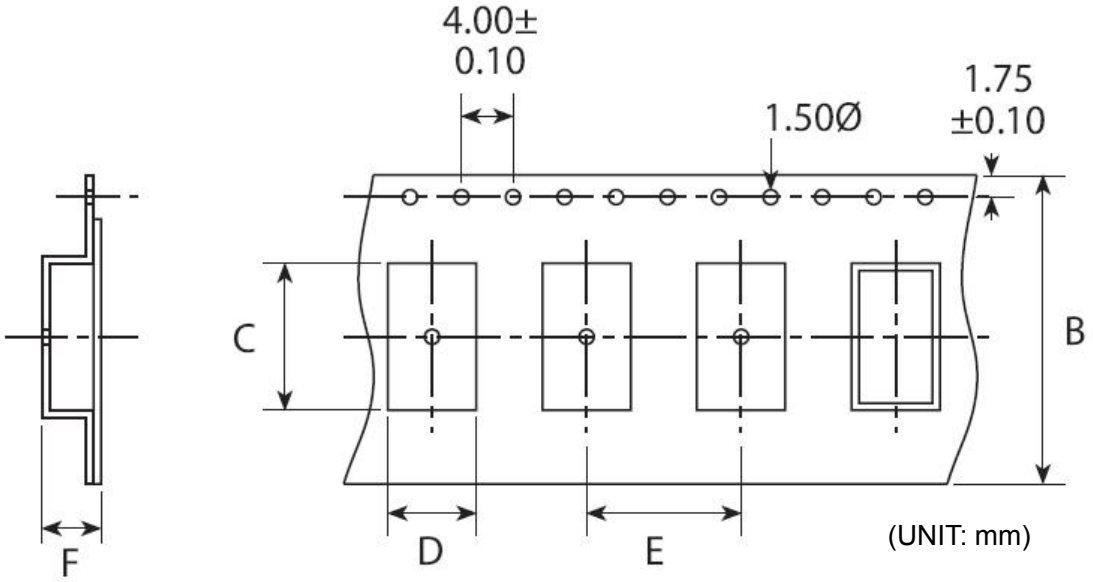

	A	B	C	D	E	F	G
OSC-SMD7050	178±2.0	16.0±0.3	7.40±0.10	5.40±0.10	8.0±0.1	2.2±0.1	60.5±1.0

b.) Dimensions of Reel

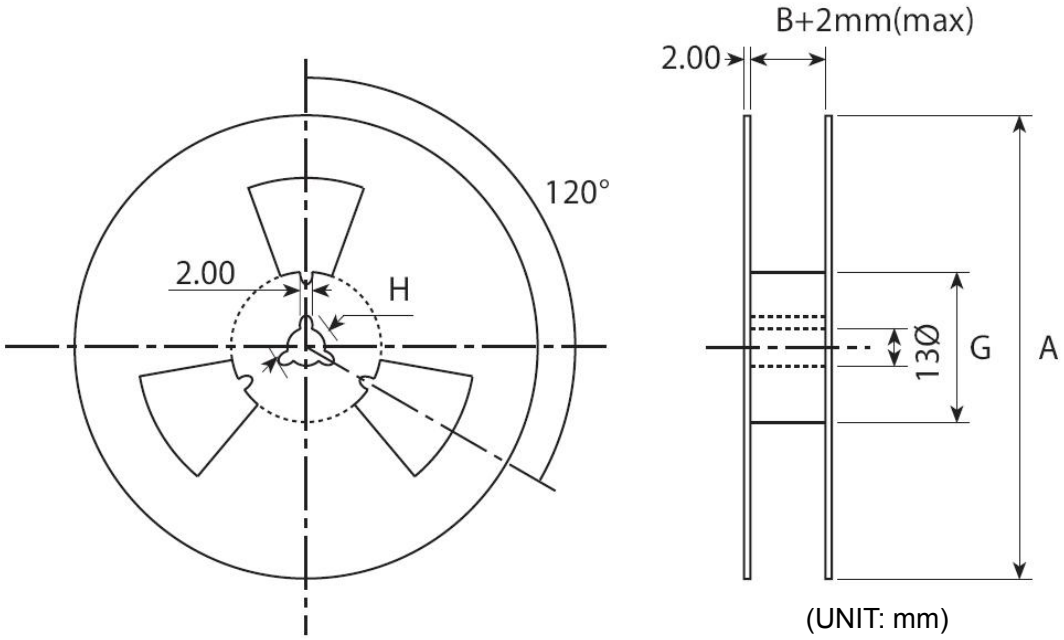

c.) Storage condition

Temperature: +40deg.C Max.

Relative Humidity: 80% Max.

d.) Standard packing quantity

1,000PCS / REEL

e.) Material of the tape

Tape	Material
Carrier tape	A – PET
Top tape	Polyester

f.) Label contents

.The type of product

.Our specification No.

.Your Part No.

.Lot No.

.Nominal Frequency

.Quantity

.Our Company Name

Sticks label for every reel.

PART NUMBER	
Lot. NO:	
HOLDER TYPE	
FREQUENCY	
REMAKS	
QUANTITY	
TIANGXI COMPONENTS CO.，LTD.	

g.) Taping dimension

Leader	Cover-tape	The length of cover-tape in the leader is more than 400 mm including empty embossed area.
	Carrier-tape	After all products were packaged, must remain more than twenty pieces or 400 mm empty area, which should be sealed by cover-tape.
Terminal	Cover-tape	The tip of cover-tape shall be fixed temporary by paper tape and roll around the core of reel one round.
	Carrier-tape	The empty embossed area which are sealed by top cover-tape must remain more the 40 mm.

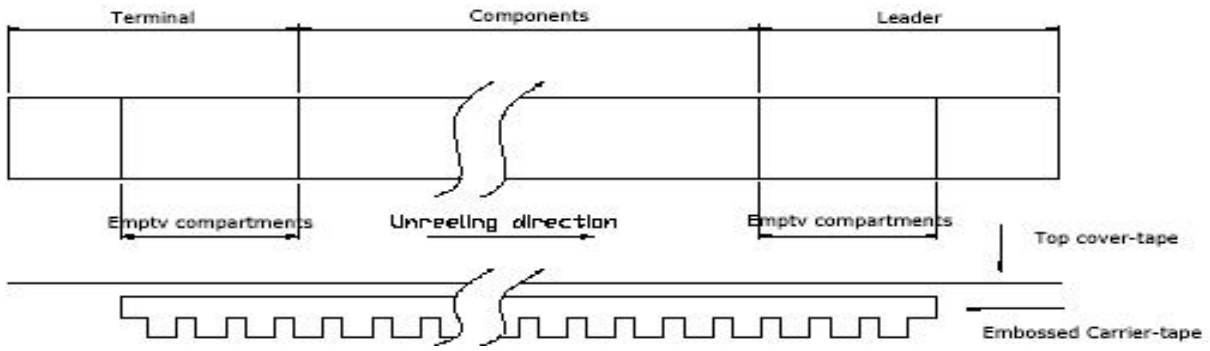

h.) Joint of tape

The carrier-tape and top cover-tape should not be jointed.

i.) Release strength of cover tape

It has to between 0.1N to 0.7N under following condition.

Pulling direction 165° to 180°

Speed 300mm/min.

Otherwise unless specified.

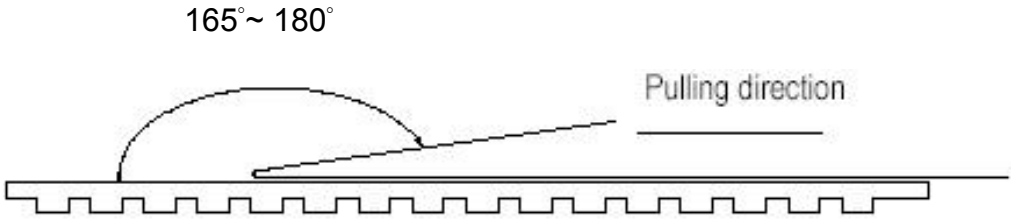

Other standards shall be based on JIS C 0806-1990.

6. Mechanical Endurance: Provided that measurement shall be carried out afterletting it alone in the room temperature for 1 hour.

	Item	Conditions	Specifications
1	Drop	Should be satisfied after dropping three times from the height of 100 cm onto hard wooden board of thickness more than 30mm.	The parameters of table 3 must be satisfied
2	Vibration	Should be satisfied after supplying following (1)Vibration Frequency: 10~55Hz (2)Cycle: 1 to 2 Min. (3)Full Cycle: 0.8mm P-P. (4)Direction: X.Y.Z (5)Time: 2 Hours / Each Direction	The parameters of table 3 must be satisfied
3	Substrate Bending	Mount the specimen on substrate. Apply the following pressure Direction: see Fig –1 Speed: 0.5 mm/sec Hours: 5 ± 1 sec Amount of substrate: 3 mm Max.	The parameters of table 3 must be satisfied
4	Adhesion	Mount the specimen on substrate. Apply the following pressure Direction: see Fig –2 Weight: 10N Hours: 10 ± 1 sec	The parameters of table 3 must be satisfied
5	Body strength	Mount the specimen on substrate. Apply the following pressure Direction: see Fig –3 Weight: 10N Hours: 10 ± 1 sec	The parameters of table 3 must be satisfied

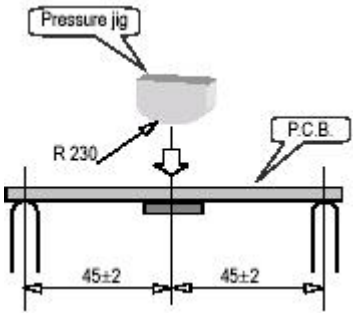

Fig-1

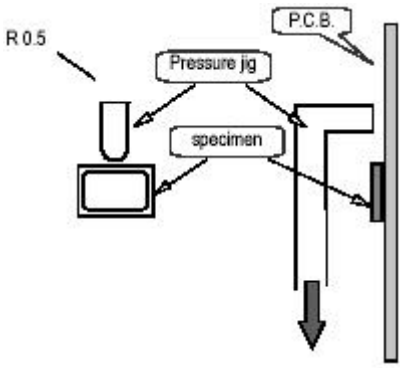

Fig-2

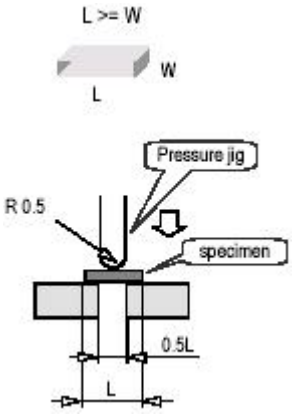

Fig-3

<table>
<tr><td>6</td><td>Seal</td><td colspan="2">Less than 2.0 x 10-9 Pa.m3/sec by Helium leak detector.
Also, no serial bubble is observed by Fluorinate tests.</td></tr>
<tr><td>7</td><td>Solder ability</td><td>3 sec Dip in 235℃±5℃ solder.
(Use ROSIN type flux for solder.)</td><td>More than 90% of lead shall be covered by new solder.</td></tr>
<tr><td>8</td><td>Resistance to Soldering Heat</td><td>Run in Reflow
Reflow soldering shall be allowed
Only two(2) time.

Available for Lead Free Soldering
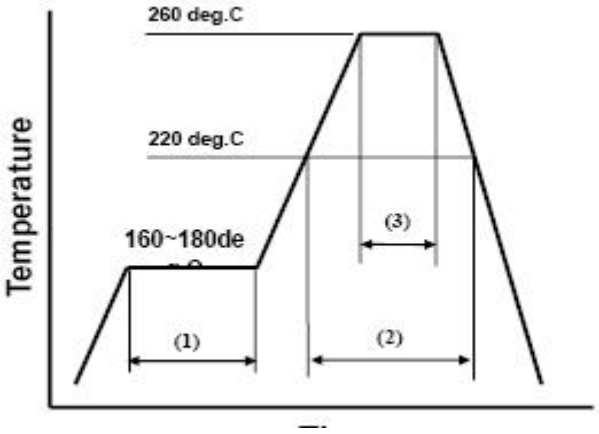

<table>
<tr><td>(1)</td><td>Preheat</td><td>160~180 deg.C</td><td>120sec.</td></tr>
<tr><td>(2)</td><td>Primary heat</td><td>220 deg.C</td><td>60sec.</td></tr>
<tr><td>(3)</td><td>Peak</td><td>260 deg.C</td><td>10sec. Max.</td></tr>
</table></td><td>The parameters of table 3 must be satisfied</td></tr>
</table>

7. Environmental Endurance: Provided that measurement shall be carried out afterletting it alone in the room temperature for 1 hour.

	Item	Conditions	Specifications
1	Humidity	Should be satisfied after letting it alone at +60℃±2℃ in humidity of 90%～95% for 500 hours.	The parameters of table 1 must be satisfied. No physical damage.
2	Storage in Low Temperature	Should be satisfied after letting it alone at -40℃±2℃ for 500 hours.	The parameters of table 1 must be satisfied. No physical damage.
3	Storage in High Temperature	Should be satisfied after letting it alone at +85℃±2℃ for 500 hours.	The parameters of table 1 must be satisfied. No physical damage.
4	Temperature Cycle	Should be satisfied after supplying the following temperature cycle (100 cycles). (Refer to Fig-4). Temperature shift from low to high, high to low shall be done in 1℃/min.	The parameters of table 1 must be satisfied. No physical damage.

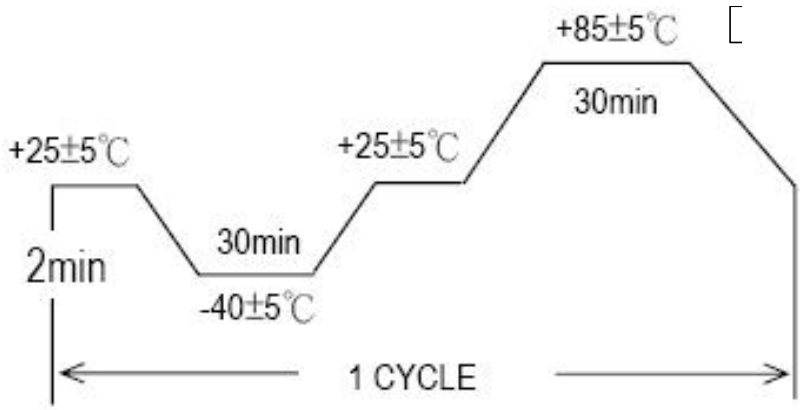

Fig-4