SUNNYWAY

SWE007

PN: SW19037EB56



Sunnyway Technology
Add: Building 65-302, No.421 Hongcao Road, Xuhui District, Shanghai
Tel: +86-021-6484 2326 Fax: +86-021-6484 2328
Email: sales@sunny-way.com Web: www.sunny-way.com

1. Electrical Specifications

Frequency range (MHz)	915MHz
Peak Gain (dBi)	0.97dBi
Average Gain (dB)	-1.79dB
VSWR	1.77
Return Loss	-11.09
Efficiency (%)	66.24%
Polarization mode	Linear
Radiation pattern	Omni-Directional
Output impedance (Ω)	50
Max. Input Power(W)	25

2. Mechanical and Environmental Specification

Mounting Type	Connector Mount
Connector Type	SMA
Antenna size(mm)	109mm*φ10mm
Material	ABS
Operating Temperature (˚C)	- 40 ˚C ~ + 85 ˚C
Storage Temperature(˚C)	- 40 ˚C ~ + 85 ˚C

3. Antenna parameters

FRE（MHz）	915
VSWR	1.77
Return Loss	-11.09
Eff(%)	66.24
Average Gain(dB)	-1.79

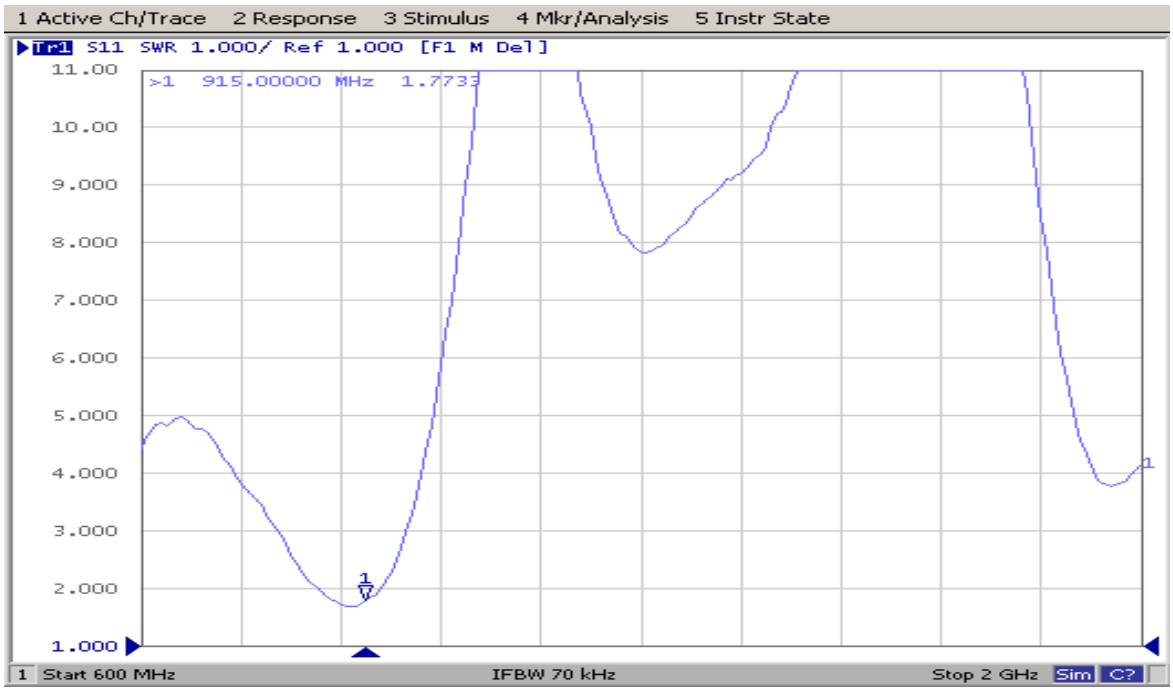

VSWR

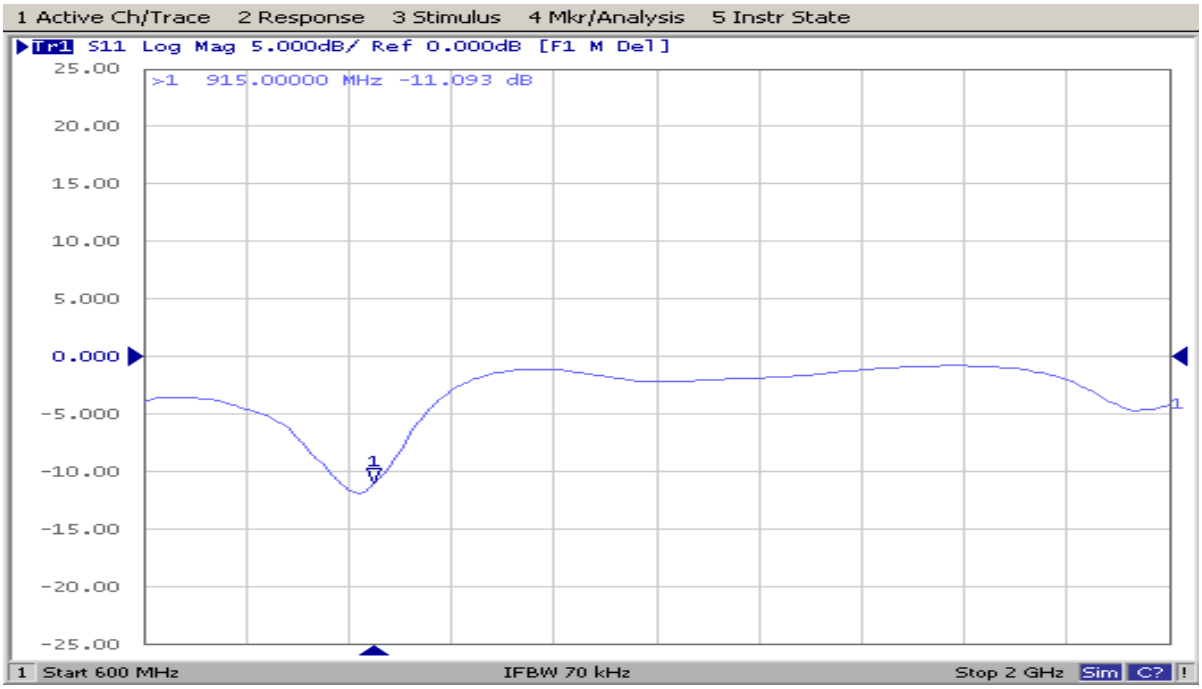
1 Active Ch/Trace
2 Response
3 Stimulus
4 Mkr/Analysis
5 Instr State
Tr1 S11 Log Mag 5.000dB/ Ref 0.000dB [F1 M Del]
>1 915.00000 MHz -11.093 dB
25.00
20.00
15.00
10.00
5.000
0.000
-5.000
-10.00
-15.00
-20.00
-25.00
1 Start 600 MHz
IFBW 70 kHz
Stop 2 GHz
Sim
C?

Return Loss

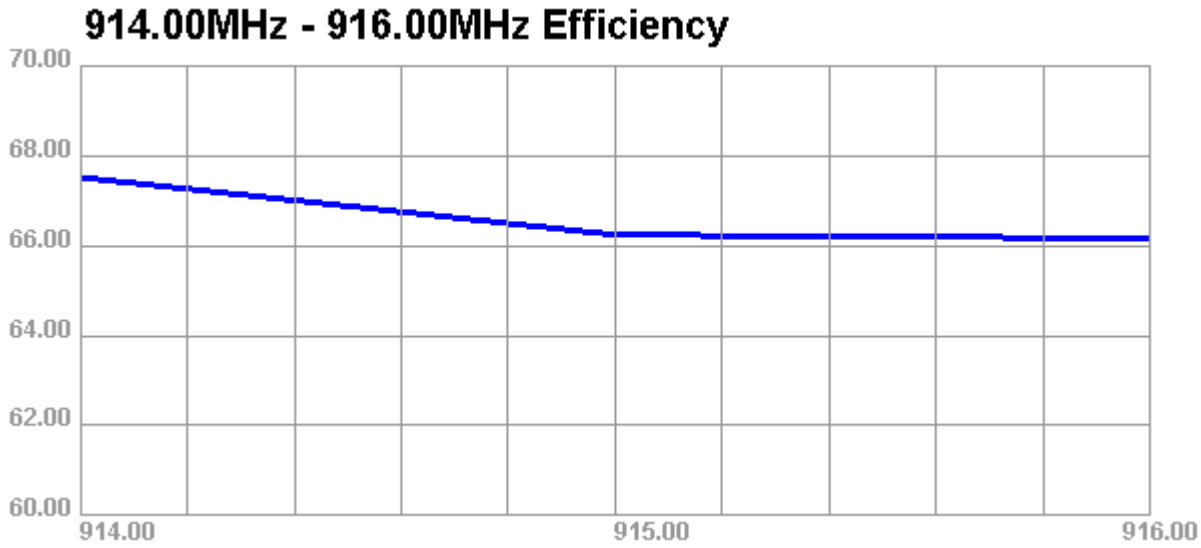
914.00MHz - 916.00MHz Efficiency
70.00
68.00
66.00
64.00
62.00
60.00
914.00
915.00
916.00

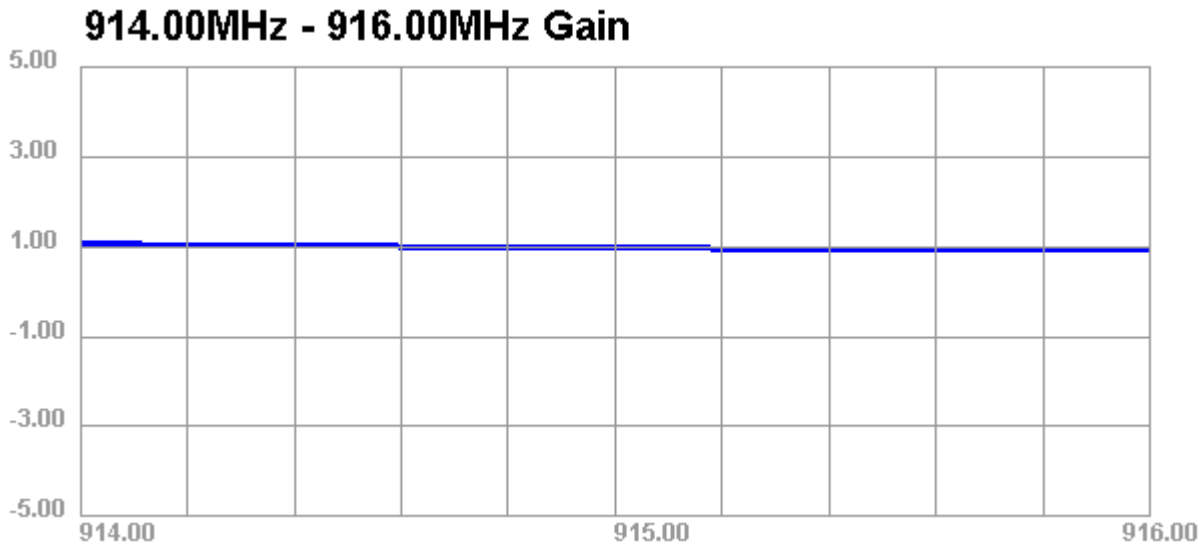

Directional pattern

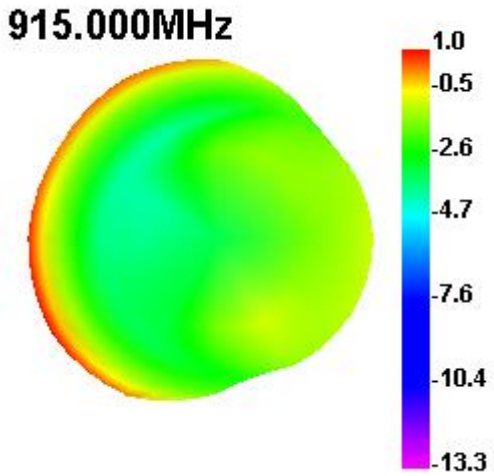

4. Antenna Drawings

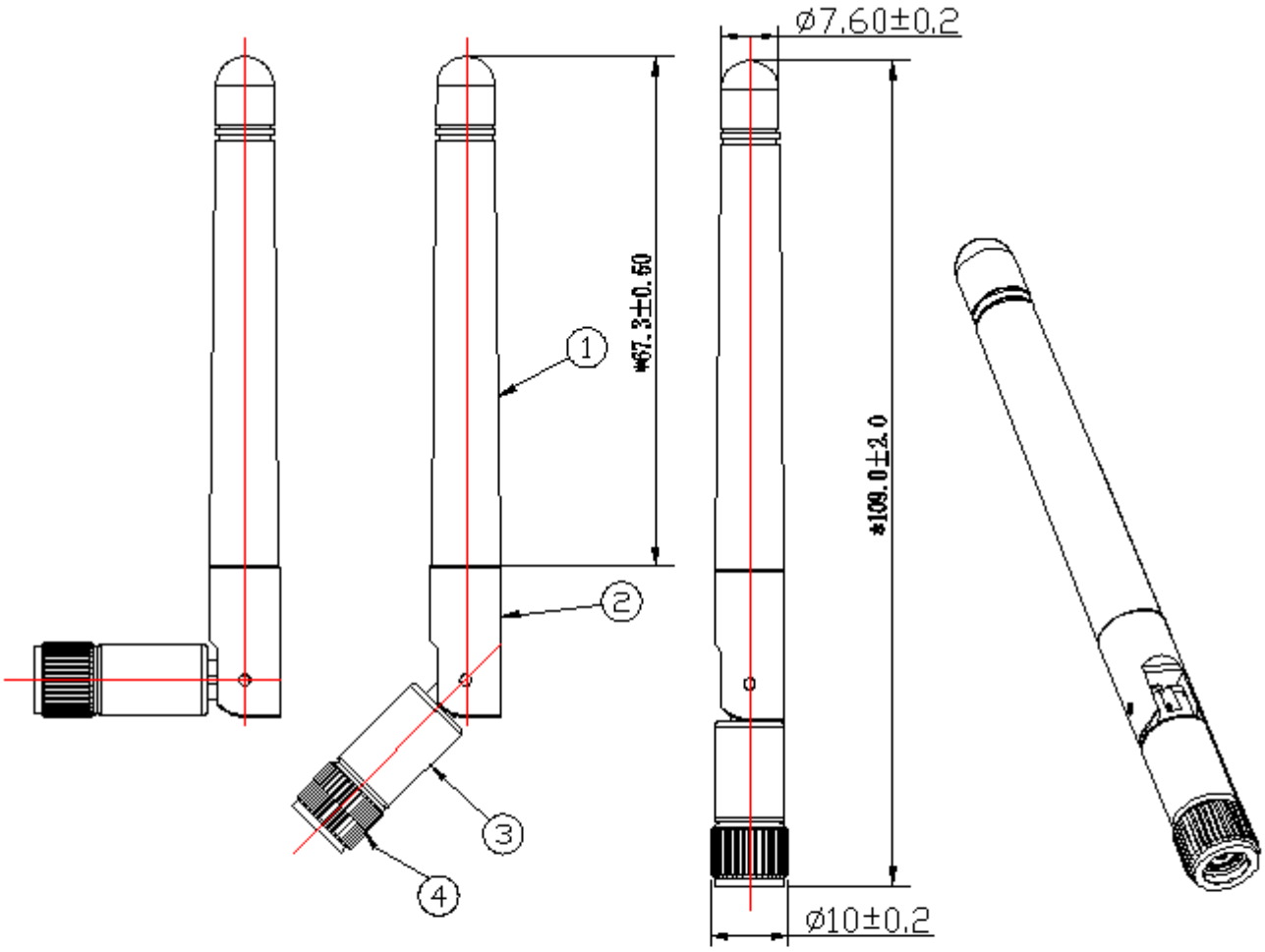

Series	Component name	Specification	Color	Quantity
4	SMA	SMA-J	black	1
3	Lower Firmware	ABS	black	1
2	Upper firmware	ABS	black	1
1	noumenon	ABS	black	1