SUNNYWAY

SWE024

PN: SW19067EB56



Sunnyway Technology

Add: Building 65-302, No.421 Hongcao Road, Xuhui District, Shanghai
Tel: +86-021-6484 2326 Fax: +86-021-6484 2328
Email: sales@sunny-way.com Web: www.sunny-way.com

1. Electrical Specifications

Frequency range (MHz)	868MHz
Peak Gain (dBi)	1.62dBi
Average Gain (dB)	-3.57dB
VSWR	1.26
Return Loss	-18.9
Efficiency (%)	43.97%
Polarization mode	Linear
Radiation pattern	Omni-Directional
Output impedance (Ω)	50
Max. Input Power(W)	25

2. Mechanical and Environmental Specification

Mounting Type	Connector Mount
Connector Type	SMA
Antenna size(mm)	48.6Xφ8mm
Material	ABS
Operating Temperature (˚C)	- 40 ˚C ~ + 85 ˚C
Storage Temperature(˚C)	- 40 ˚C ~ + 85 ˚C

3. Antenna parameters

FRE（MHz）	868
VSWR	1.26
Return Loss	-18.91
Eff (%)	43.97
Average Gain(dB)	-3.57

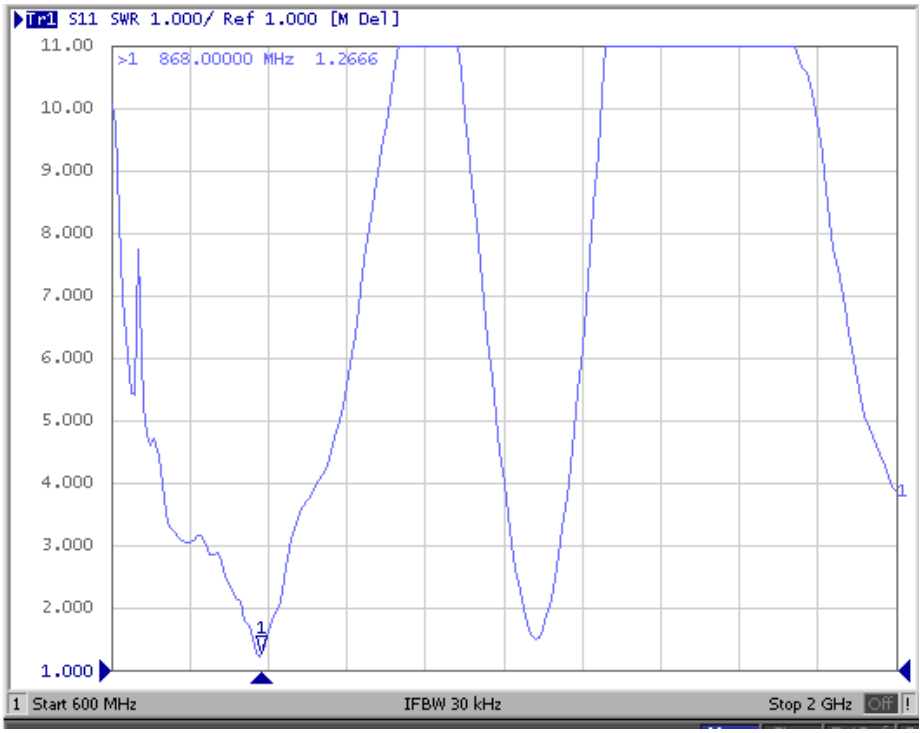

VSWR

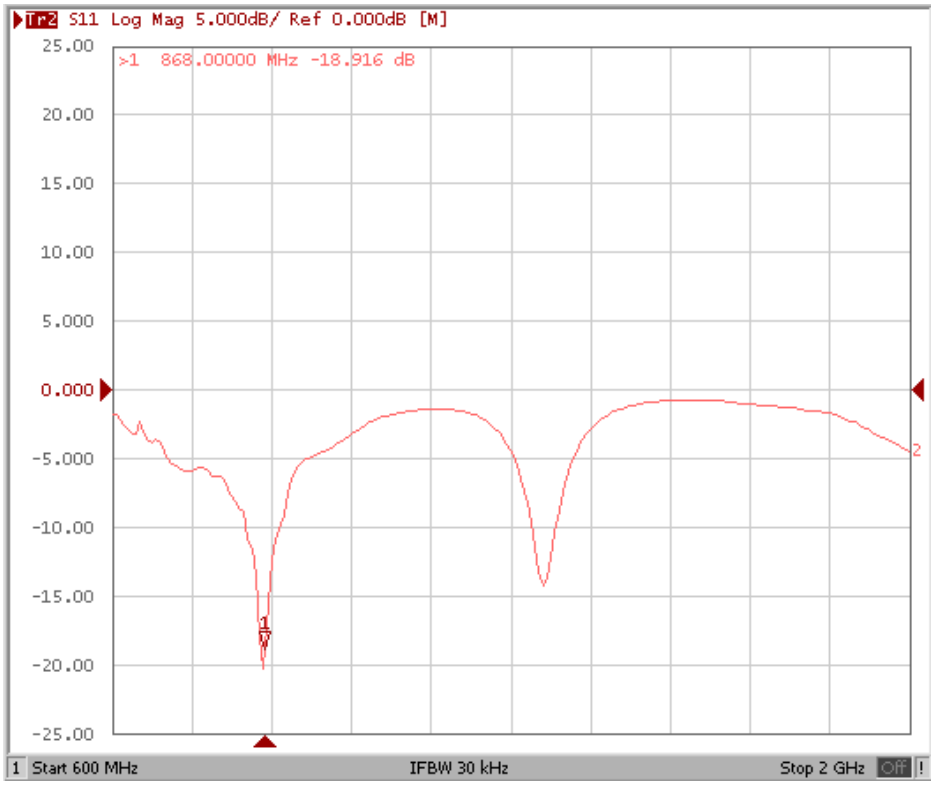

Return Loss

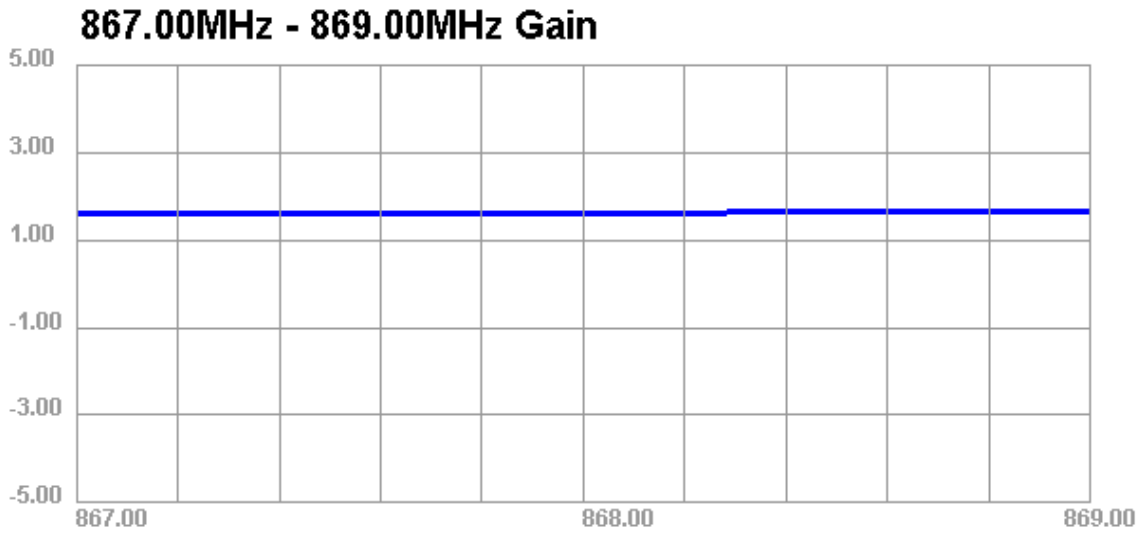
867.00MHz - 869.00MHz Gain
5.00
3.00
1.00
-1.00
-3.00
-5.00
867.00
868.00
869.00

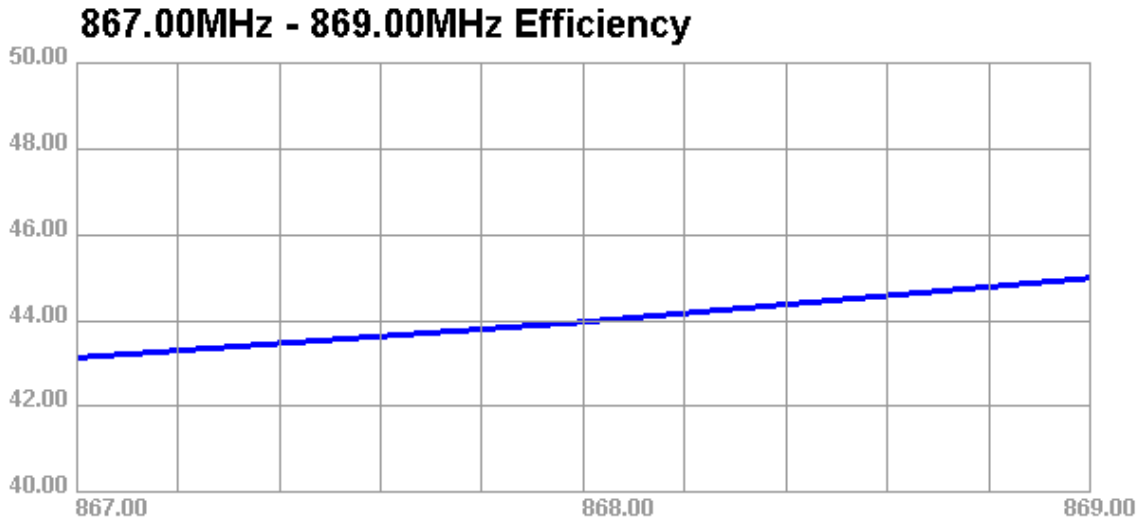
867.00MHz - 869.00MHz Efficiency
50.00
48.00
46.00
44.00
42.00
40.00
867.00
868.00
869.00

Directional pattern

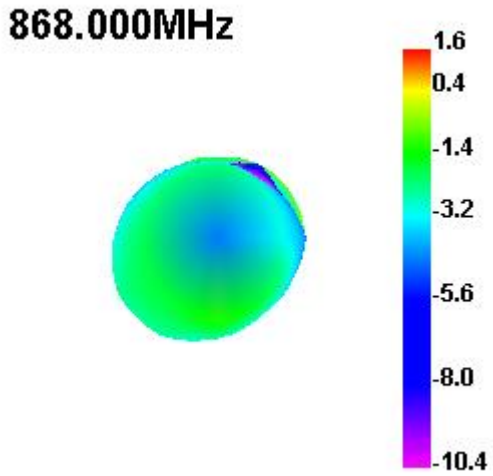

4. Antenna Drawings

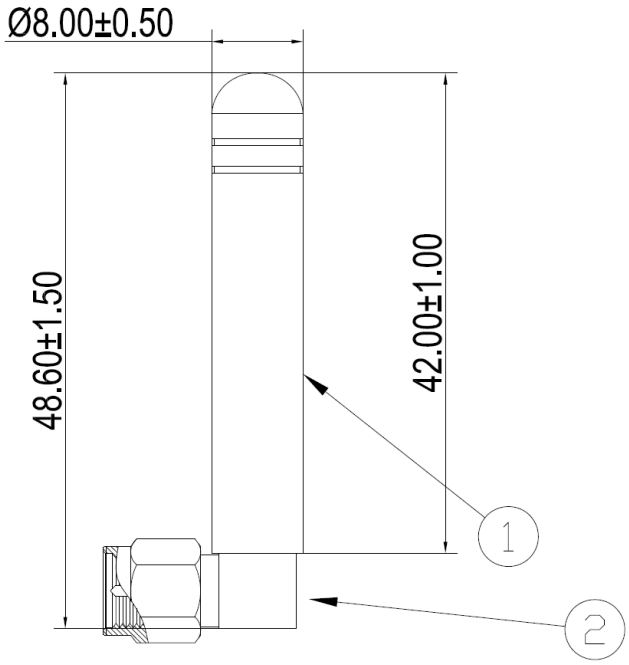

Series	Component name	Specification	Color	Quantity
2	SMA	SMA-J	Yellow	1
1	noumenon	ABS	black	1