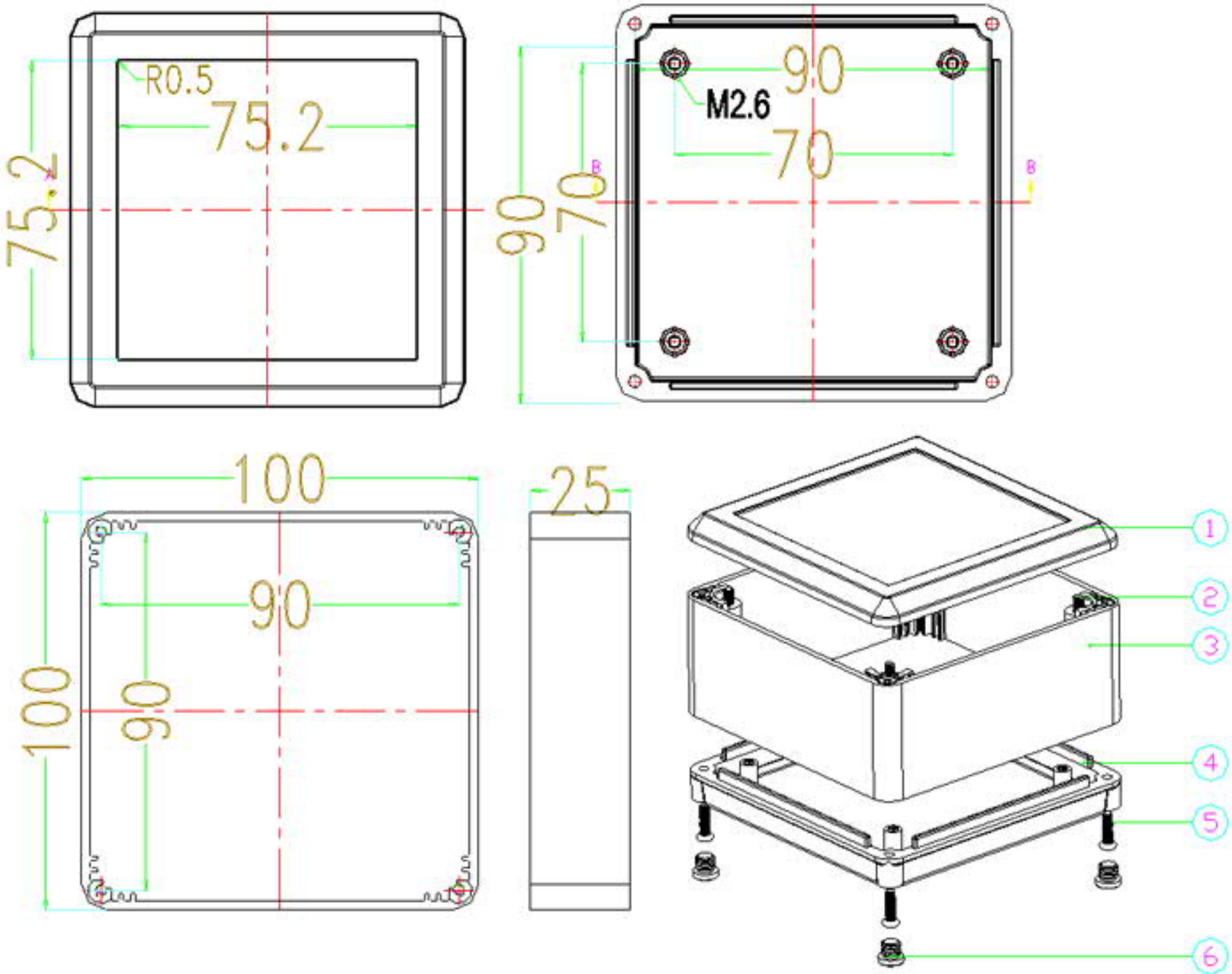
R0.5
75.2
75.2
90
70
M2.6
90
70
B
B
100
100
90
90
25
1
2
3
4
5
6