SUNNYWAY

SWG016

PN: SW20062IB93

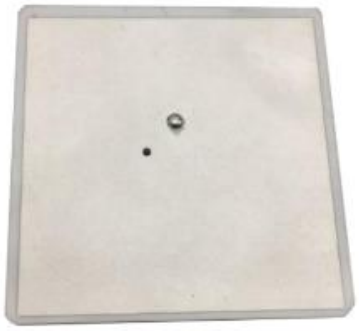

Features:

- Frequency bands: 868MHz.
- High gain
- Impedance 50 Ohm.
- Size 60.0 x 60.0 x 5.0mm

Sunnyway Technology

Add: 1F, Building 4, No.215-99, GaoGuang Road, QingPu District, Shanghai, China
Tel: +86-021-6083 5368 Fax: +86-021-6484 2328
Email: info@sunny-way.com Web: www.sunny-way.com

1. Electrical Specifications

Frequency range(MHz)	**868MHz**
Peak Gain (dBi)	2.2
Average Gain (dB)	-2.0
VSWR	1.12
Return Loss	-24.70
Efficiency (%)	62.7
Polarization mode	RHCP
Radiation pattern	Hemispherical
Output impedance (Ω)	50
Ground plane	60x60 mm

2. Mechanical and Environmental Specification

Mounting Type	**Adhesive**
Adhesive Type	3M9448A
Connector Type	Welding
Antenna size(mm)	60mm (L) x60 mm (W) x 5mm (H)
Material	Ceramic
Operating Temperature (˚C)	-40 ˚C ~ +85 ˚C
Storage Temperature(˚C)	-40 ˚C ~ +85 ˚C

3. Antenna parameters

3.1 General Data

FRE (MHz)	865	868	871
VSWR	1.76	1.12	2.09
Return Loss	-12.24	-24.70	-9.58
Eff (%)	50.0	62.7	60.1
Average Gain(dB)	-3.0	-2.0	-2.2

3.2 VSWR

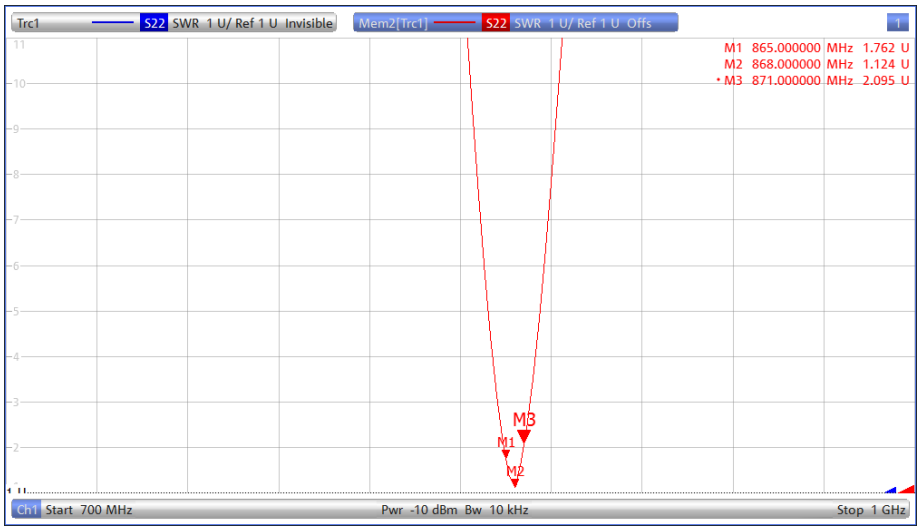

3.3 Return Loss

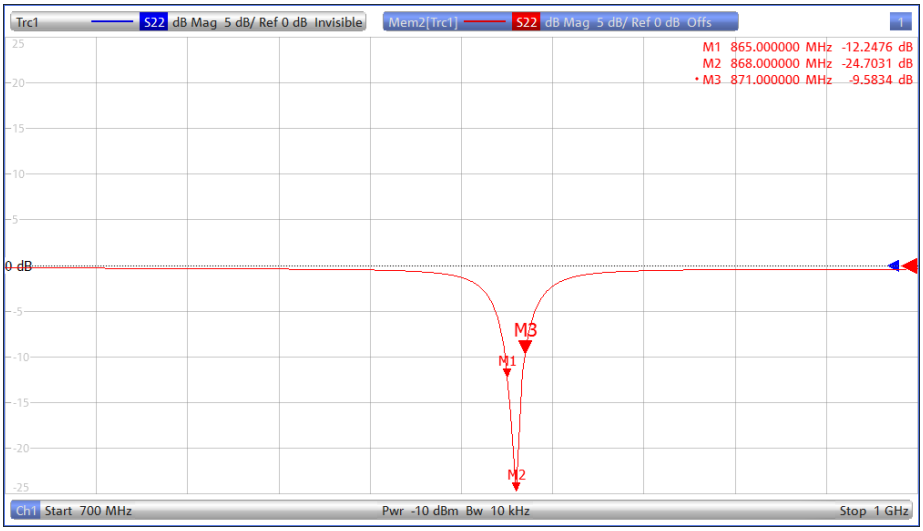

3.4 Efficiency and Gain

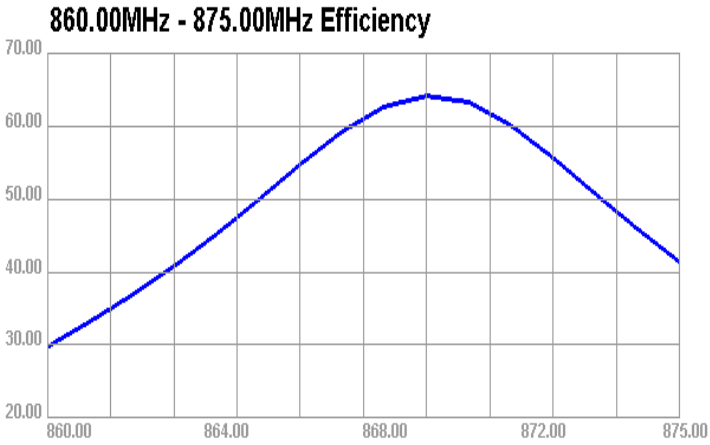

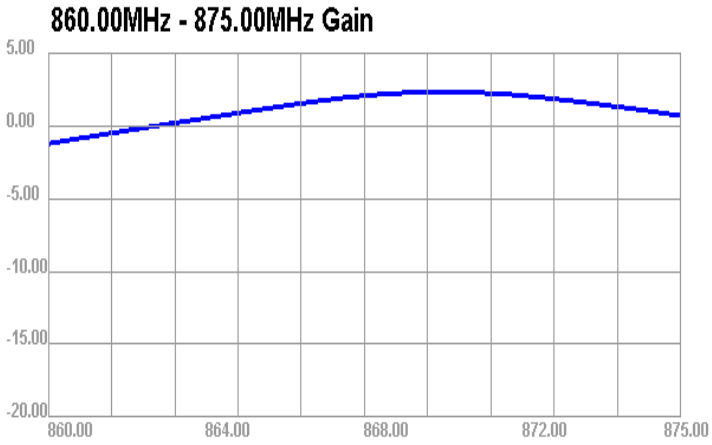

3.5 Directional pattern

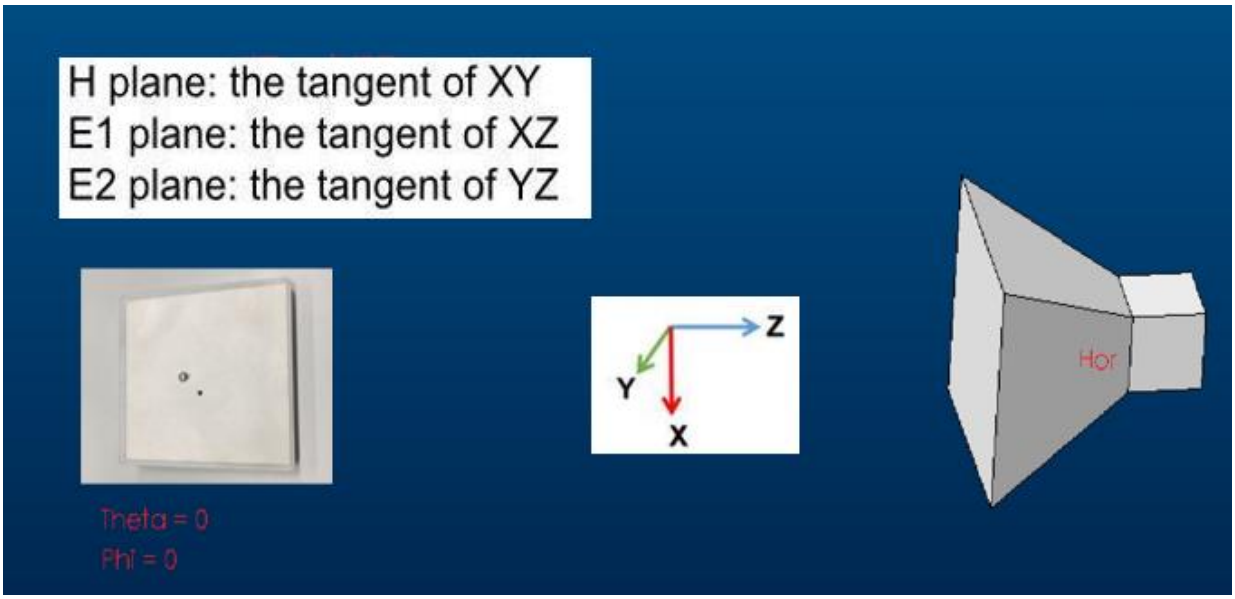

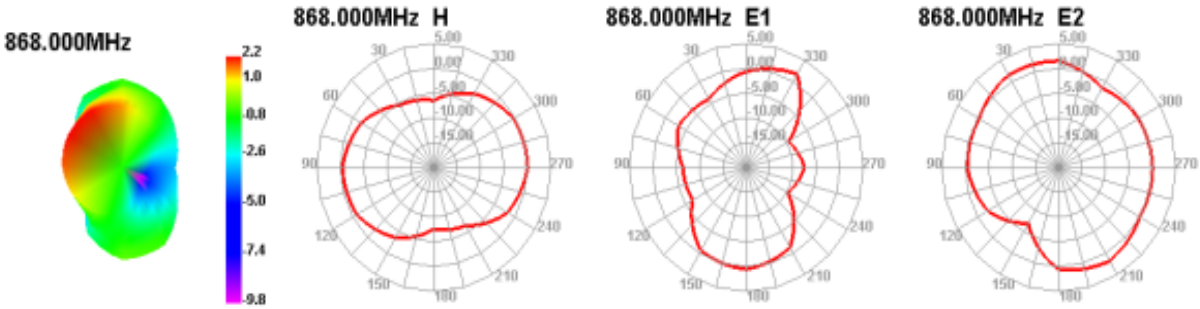

4.Antenna Drawings

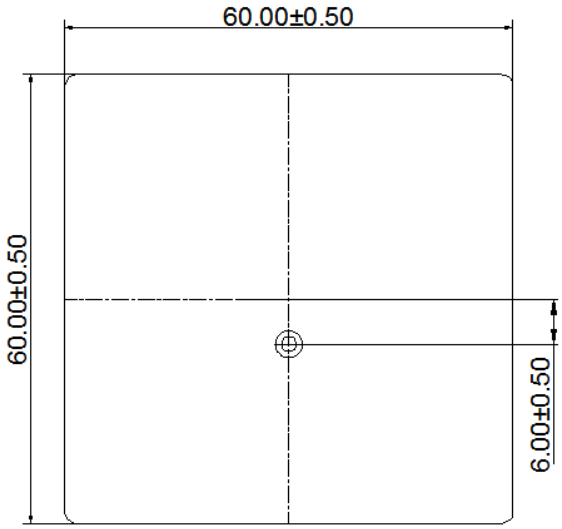

TOP

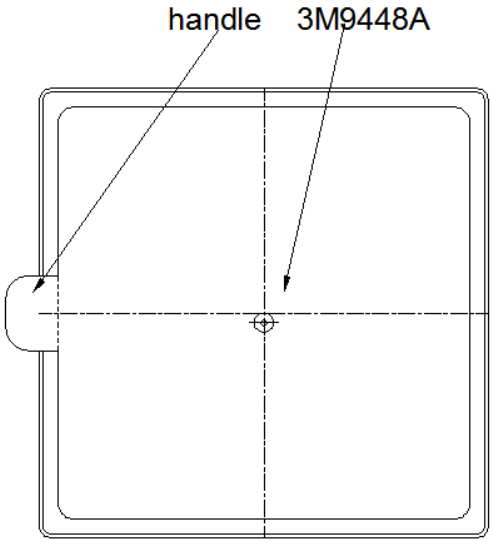

BOTTOM

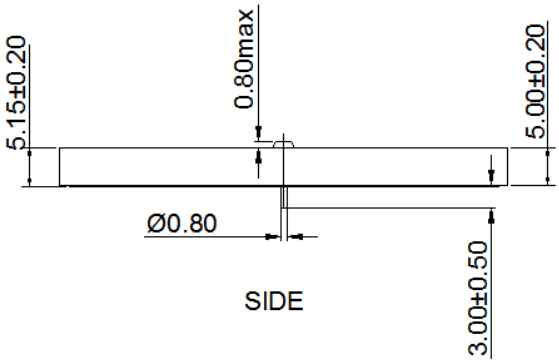

SIDE