SWG019

PN: SW20266IB93



Features:

- Frequency bands: 1561/1575.42/1602MHz.
- Ceramic patch antenna.
- 4dBi+ GPS/GLONASS/GALILEO/BEIDOU.
- Impedance 50 Ohm.
- Size 35.0 x 35.0 x 3.0mm.

Applications:

- Solution for all global public constellations: GPS/GLONASS/GALILEO/BEIDOU.

Sunnyway Technology
Add: 1F, Building 4, No.99, Lane 215, GaoGuang Road, QingPu District, Shanghai, China
Tel: +86-021-6083 5368 Fax: +86-021-6484 2328
Email: info@sunny-way.com Web: www.sunny-way.com

1. Electrical Specifications

Standards	GPS/GLONASS/GALILEO/BEIDOU		
Frequency range(MHz)	1561MHz	1575.42MHz	1602MHz
Peak Gain (dBi)	4.5	4.7	4.4
Average Gain (dB)	-1.2	-1.6	-1.7
VSWR	2.3	2.8	2.7
Return Loss	-8.0	-6.4	-6.5
Efficiency (%)	75.8	68.8	66.9
Polarization mode	RHCP		
Radiation pattern	Hemispherical		
Output impedance (Ω)	50		
Ground plane (mm)	70x70		

Note: All parameters are measured with Sunnyway's EVK which size is 70*70mm

2. Mechanical and Environmental Specification

Mounting Type	Adhesive
Adhesive Type	NITTO No.5000NS
Connector Type	Welding
Antenna size(mm)	35mm (L) x35 mm (W) x 3mm (H)
Material	Ceramic
Operating Temperature (˚C)	-40 ˚C ~ +85 ˚C
Storage Temperature(˚C)	-40 ˚C ~ +85 ˚C

3. Antenna parameters

3.1 General Data

FRE (MHz)	1561	1575.42	1602
VSWR	2.3	2.8	2.7
Return Loss	-8.0	-6.4	-6.5
Eff (%)	75.8	68.8	66.9
Average Gain(dB)	-1.2	-1.6	-1.7

3.2 VSWR

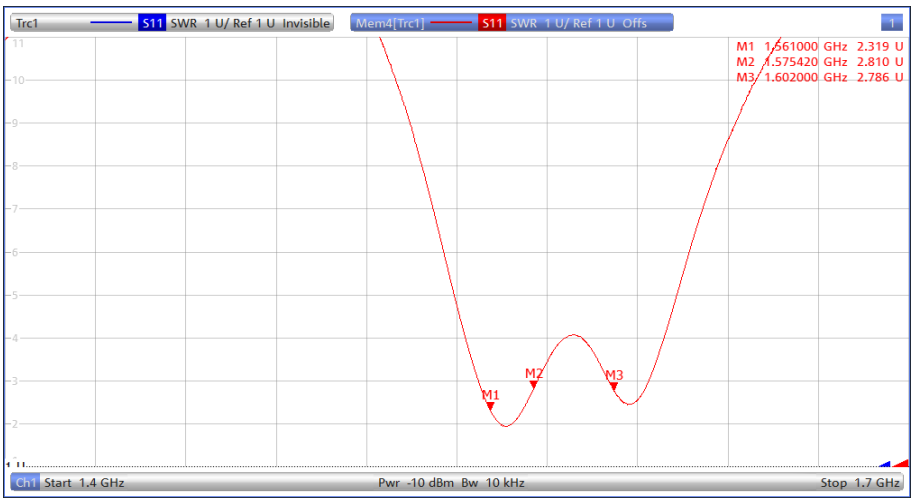

3.3 Return Loss

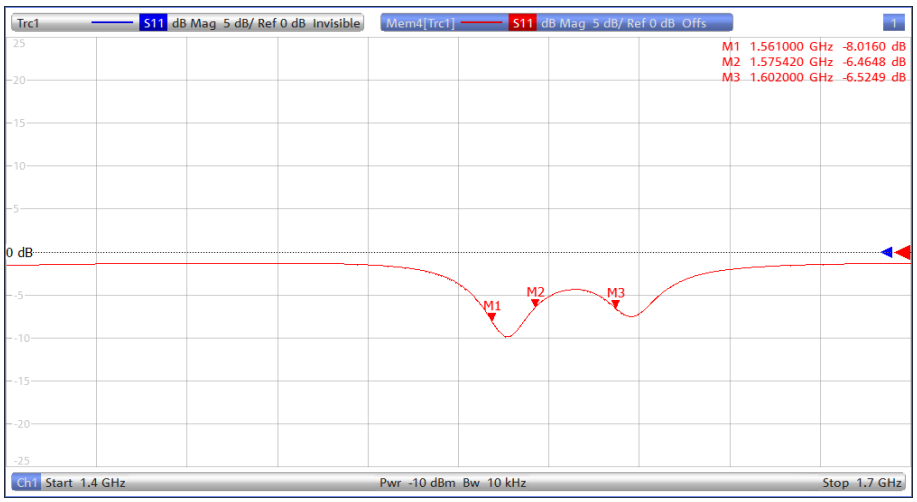

3.4 Smith

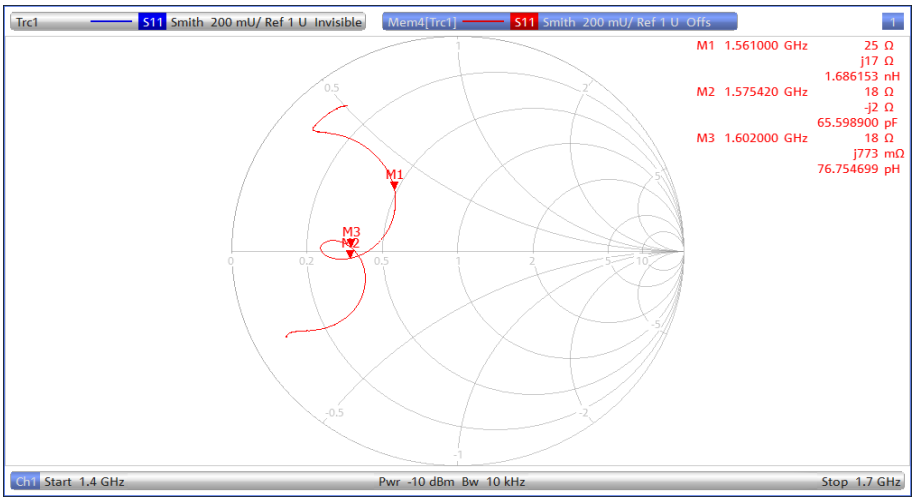

3.5 Efficiency

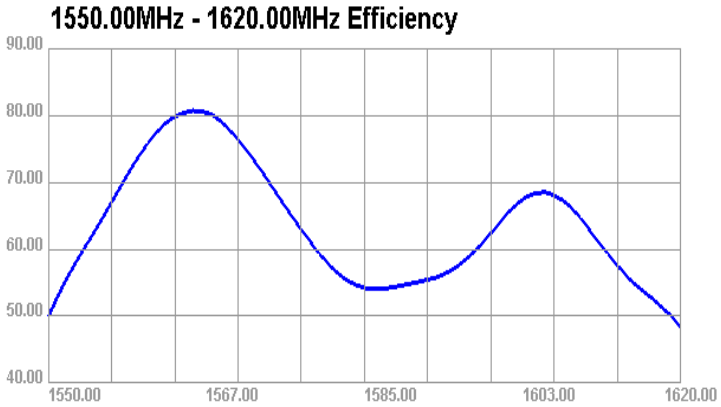

3.6 Gain

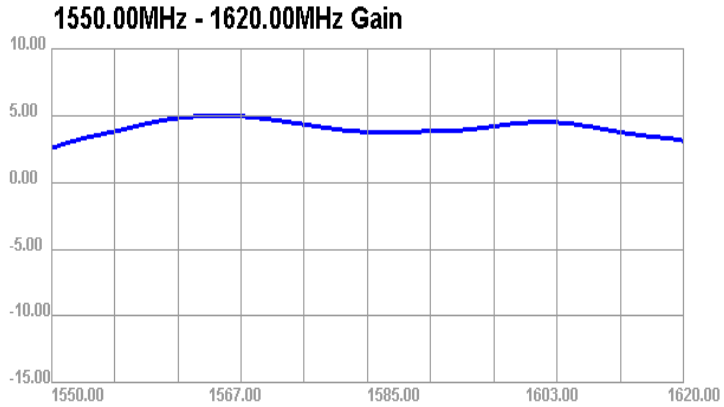

3.7 Directional pattern

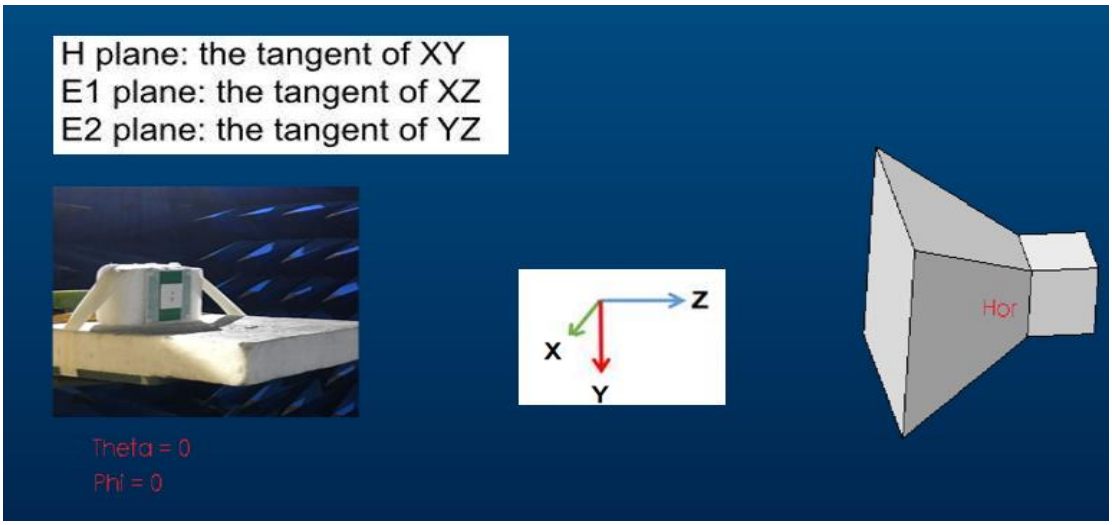

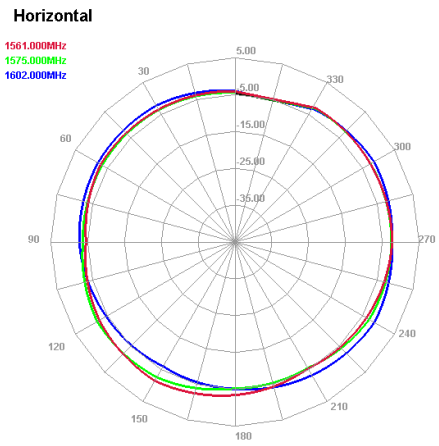

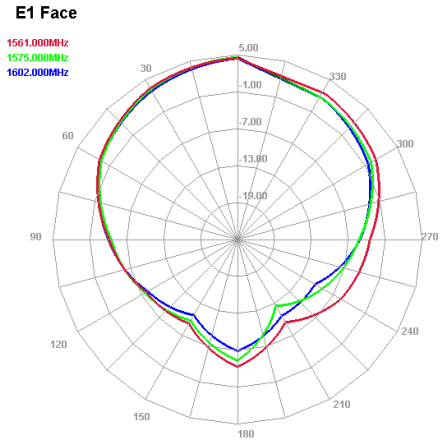

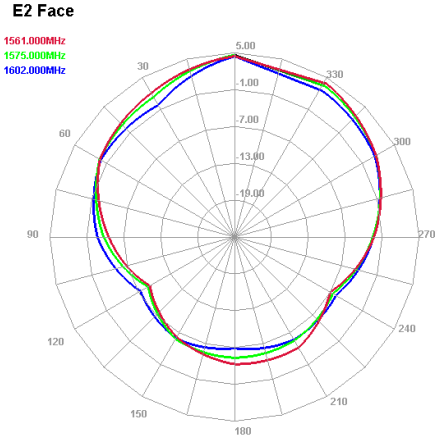

4.Antenna Drawing

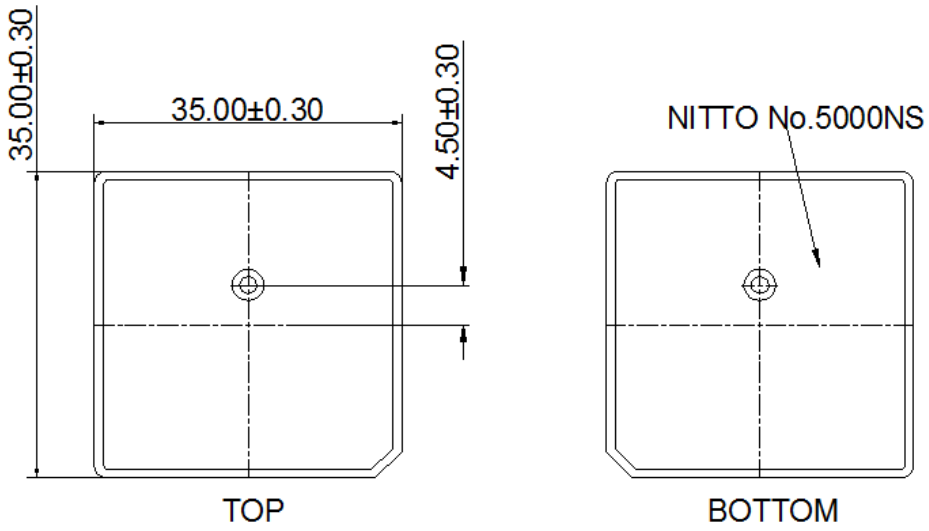

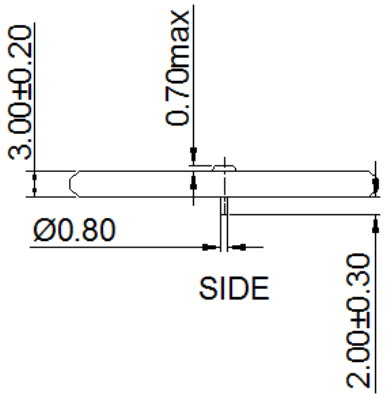

Evaluation Board (unit: mm)

