SAMPLE APPROVAL

Model No.: U20003-1A

Revision: A.1

Issue Date: 2020.03.20

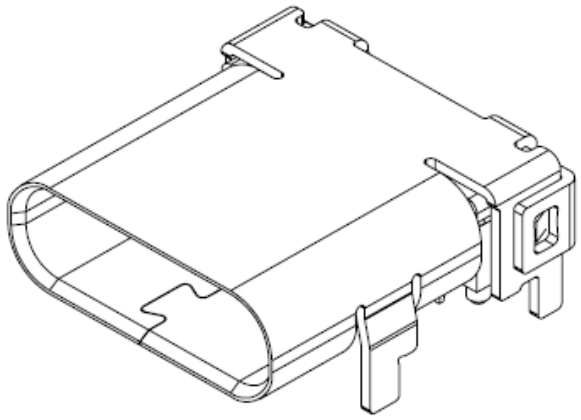

MUP INDUSTRIAL CO., LTD

LingWu Industrial Park, Junzibu, Guanlan Street, Baoan District Shenzhen, China

TEL: 0755-29673656/57/58 **FAX: 0755-29673655**

E-Mail: sales@mupconnector.com **URL: Http:// www.mupconnector.com**

MUP INDUSTRIALCO., LTD. All Rights Reserved. www.mupconnector.com
All specifications and details published are subject to change without notice.
Please don't reproduce or copy by any means.

REV.	DESCRIPTION OF REVISIONS	APPR.	CHKD.	DRAW.	DATE
1	Ooriginal reversion	lucky	lucky	Roy	2018.8.25
2	Modify product model				
		lucky	lucky	Roy	2020.03.20

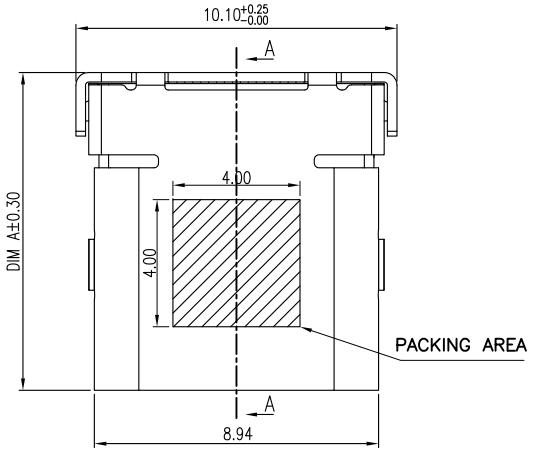

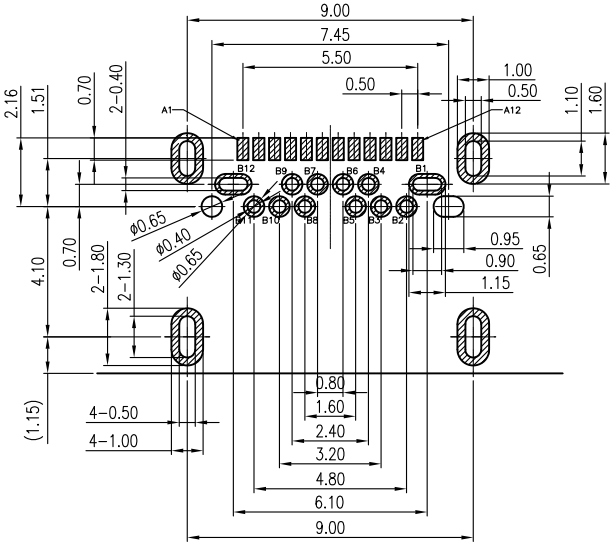

RECOMMENDED P.C.B. LAYOUT
TOLERANCE UNSPECIFIED ±0.05mm

NOTE:
1. MECHANICAL:
   1-1.MATING FORCE: 0.5~2.0Kgf
   1-2.UMMATING FORCE: Initial: 0.8~2.0Kgf
   After 500 to 10,000cycles: 0.6~2.0Kgf
   1-3.FREQUENCE:200±50 CYCLES/HOUR,10000 CYCLES;
2. ELECTRICAL CHARACTERISTICS:
   2-1. CURRENT RATING: 5.0A Max.
   2-2. INITIAL CONTACT RESISTANCE:40mΩ Max.
   2-3. INSULATION RESISTANCE:100MΩ MIN
   2-4. WITHSTANDING VOLTAGE:100V AC,1 MINUTE;
5. ENVIRONMENTAL
   TEMPERATRUE RANGE: -25°C TO +85°C.

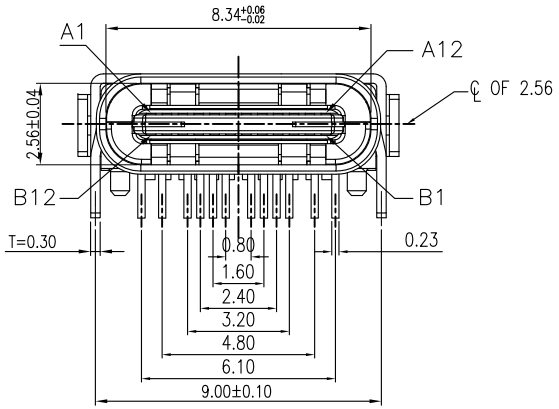

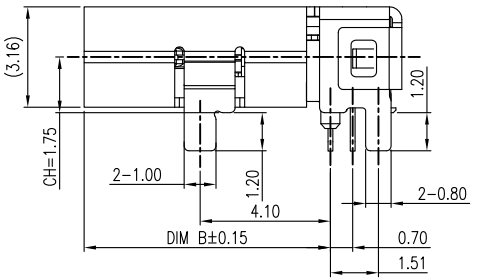

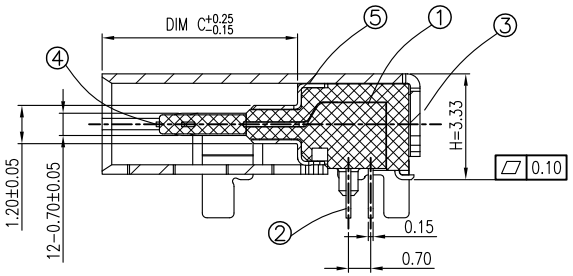

SECTION A-A

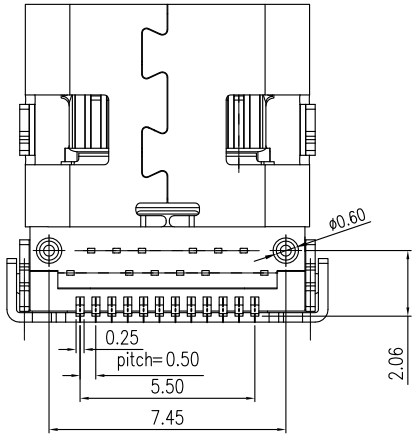

A1	GND	B12	GND
A2	SSTXP1	B11	SSRXP1
A3	SSTXN1	B10	SSRXN1
A4	VBUS	B9	VBUS
A5	CC1	B8	SBU2
A6	DP1	B7	DN2
A7	DN1	B6	DP2
A8	SBU1	B5	CC2
A9	VBUS	B4	VBUS
A10	SSRXN2	B3	SSTXN2
A11	SSRXP2	B2	SSTXP2
A12	GND	B1	GND
PIN	SIGNAL NAME	PIN	SIGNAL NAME

Model No.	DIM A	DIM B	DIM C
2 U20003-1A	10.00	7.75	6.15
U20003-2A	8.65	6.40	4.80

ITEM	PART NAME	Q'TY	MATERIAL	FINISH
1	Molding	1	THERMOPLASTIC	Black, UL94V-0
2	CONTACT	1	Copper	Contact area:Gold plated
3	SHELL	1	STAINLESS STEEL	Ni plated over all
4	MID-PLATE	1	STAINLESS STEEL	------
5	GND-PLATE	2	STAINLESS STEEL	------

Unless Otherwise specified, other tolerance are:

X. ±0.40	X°. ±5°
X.X ±0.30	X.X° ±4°
X.XX ±0.25	X.XX° ±3°
X.XXX±0.15	X.XXX°±2°

APPR.	LUCKY/2018.8.25
CHKD.	LUCKY/2018.8.25
DRAW.	Roy/2018.8.25

RoHS PROCESS COMPLIANT

MUP® MUP INDUSTRIAL CO.,LTD.

NAME: **USB Type C Hybrid Right-Angle Receptacle**

MODEL No: **MUP-U20003-XA**

TYPE : **DIP+SMT & Hybrid Right-Angle**

PRAT NO. :	DWG NO. :
U20003-XA	DWG-U20003-XA-001

PROJ.	UNIT	SCALE	SHEET	REVISION
	mm	1:1	1/2	2

REV.	DESCRIPTION OF REVISIONS	APPR.	CHKD.	DRAW.	DATE
1	0original reversion	lucky	lucky	Roy	2018.8.25
2	Modify product model	lucky	lucky	Roy	2020.03.20

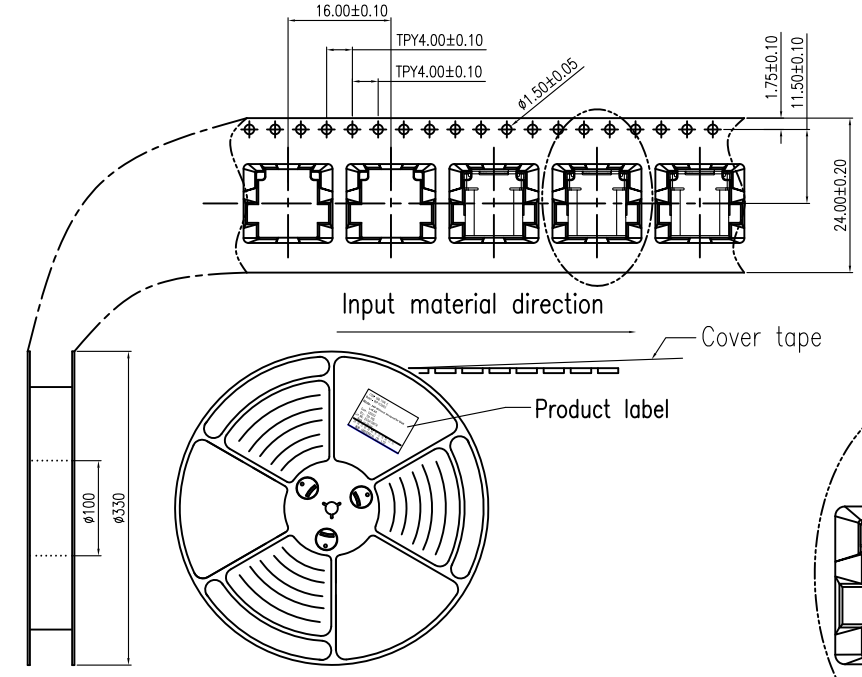

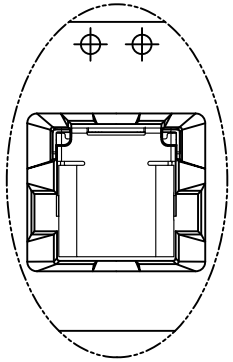

Direction of Production

NOTES

1. NUMBER OF CONNECTORS:700PCS/REEL
2. LEAD TAPE LENGTH

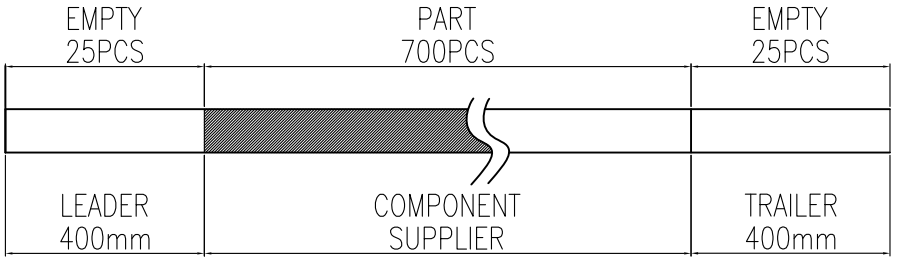

3. QUANTITY:5600/CARTON
4. WEIGHT :
   - 4.1 NET WEIGHT : x.xx Kg
   - 4.2 GROSS WEIGHT : x.xx Kg

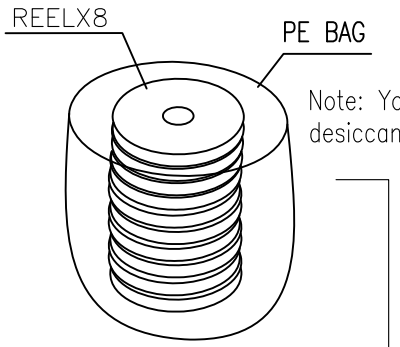

Note: You should put two desiccants in each PE bag

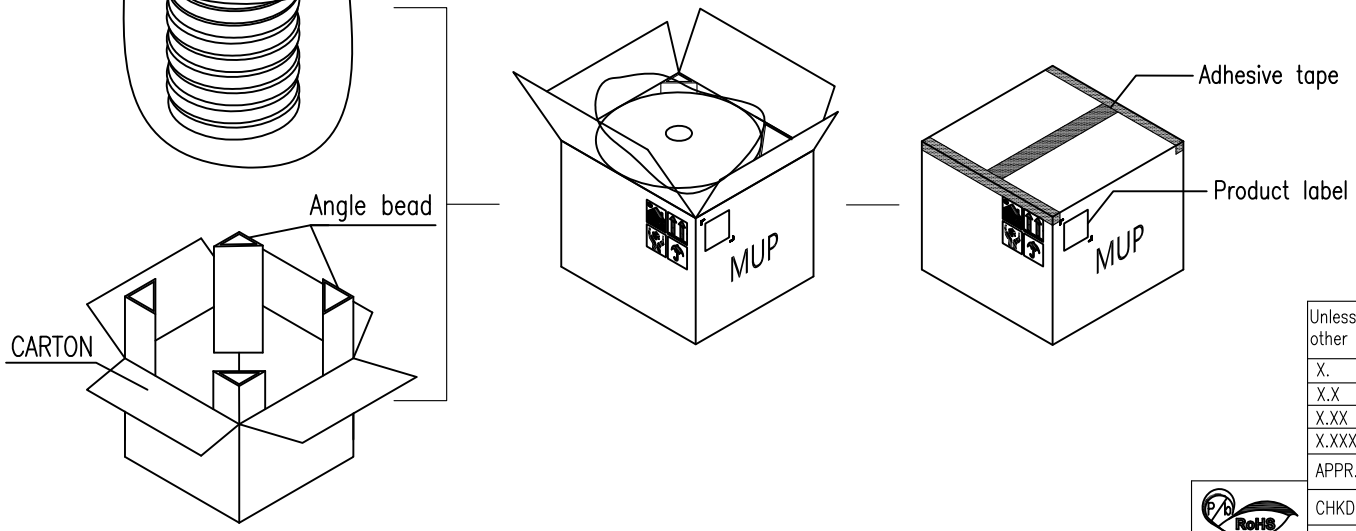

Unless Otherwise specified, other tolerance are:			
X.	±0.40	X°.	±5°
X.X	±0.30	X.X°	±4°
X.XX	±0.25	X.XX°	±3°
X.XXX	±0.15	X.XXX°	±2°

APPR.	LUCKY/2018.8.25
CHKD.	LUCKY/2018.8.25
DRAW.	Roy/2018.8.25

PROCESS COMPLIANT

MUP® MUP INDUSTRIAL CO.,LTD.

NAME: **USB Type C Hybrid Right-Angle Receptacle**

MODEL No: **MUP-U20003-XA**

TYPE : **DIP+SMT & Hybrid Right-Angle**

PRAT NO. :	DWG NO. :
U20003-XA	DWG-U20003-XA-001

PROJ.	UNIT	SCALE	SHEET	REVISION
	mm	1:1	2/2	2

1. Scope (范围)

This specification covers the performance, tests and quality requirements for the MUP Waterproof type USB 3.1 C TYPE Connector.

（此份产品规格适用于德海威电子 防水型 USB 3.1 C TYPE 连接器的产品功能，测试方法及质量要求）

2. Applicable document（适用文件）

The following documents form a part of this specification to the extent specified herewith.In the event of conflict between the requirements of this specification and the product drawing, the product drawing shall take precedence .In the event of conflict between the requirements of this specification and the referenced documents ,this specification shall take precedence.

后文表格文件被视为本规范之一部份。当出现本规范的要求与产品图相冲突时,以产品图为准,当出现本规范的要求与有关文件相冲突时,以本规范为准。

2.1. Industry Standard（工业标准）

EIA364 Test Methods for Electronic and Electrical Component Parts.
电子以及电子组件的测试方法依照EIA364之规定执行

3. Material（材料）

Refer to respective sales & engineering drawings
参照业务需求及工程图面

4. REQUIREMENTS（要求）

4.1 Performance requirement(性能要求):

Connector shall be designed to meet the electrical, mechanical and environmental performance requirements specified in 5.
本规范所定义之连接器的设计应达到本规范第 5 条款所定义的电气性能,机械性能以及环境等性能要求.

4.2 Ratings (额定条件):

A. Ratings Voltage（额定电压）:20 V AC（RMS）
B. Ratings Current（额定电流）:VBUS Pins (A4,A9,B4,B9)：1.25A/Pin，
   GND Pins(A1,A12,B1,B12) ： 1.25A/Pin
   Other All Pins 0.25A/Pin
C. Operating Temperature（操作温度）:-25℃ to +85℃

 All Rights Reserved.
All specifications and details published are subject to change without notice.
Please don't reproduce or copy by any means.

The product shall be designed to meet the electrical, mechanical and environmental performance requirements specified in Figure 1. All tests shall be performed at ambient environmental conditions.

表1 详述了产品的电气、机械和环境的测试要求，所有测试都须在室温下执行。

5. Test Methods and Requirements: (测试方法及要求)

EXAMINATION OF PRODUCT（产品检验）				
No.	**TEST ITEM（测试项目）**	**DOCUMENT（参考文件）**	**PROCEDURE（程序）**	**REQUIREMENT（要求）**
1	External appearance checks 外观检验	Draw Specified& EIA 364-18 图面规范& EIA 364-18	Meets requirements of product drawing. No physical damage. 必须符合图面，外观无损伤	Visual inspection. 视觉检验
ELECTRICAL REQUIREMENT（电气性能）				
2	Contact Resistance 接触阻抗	EIA 364-23	Measure at 20mV(Max) open circuit at 100 mA. 在开放电路 20mV（Max），100mA 电流下量测	Initial: 40mΩ max. After test: 50mΩ max. 初始阻抗40mΩ最大， 测试后阻抗值 50mΩ最大
3	Insulation Resistance 绝缘阻抗	EIA 364-21	Test voltage 100±10V DC between adjacent contacts of mated and unmated connector assemblies. Interval of shield case and contacts too, in the same way. 100±10 V 交流电下测试相邻未配对连接器间电路	Initial：1,00MΩ min. After tests; 100MΩ min. 初始阻抗 100M 最小， 测试后阻抗值 100M 最小
4	Dielectric withstanding Voltage 耐电压	EIA 364-20	Mated connector, apply 100V AC (RMS.) for 1 minute between adjacent terminal or ground. 配合的连接器在相邻的终端或接地之间施加 100V 的交流电压 1 分钟.	No Breakdown Leakage current: 0.5mA Max 不能击穿 漏电流：0.5mA 最大

 All Rights Reserved.
All specifications and details published are subject to change without notice.
Please don't reproduce or copy by any means.

MECHANICAL REQUIREMENT（机械性能）				
5	Mating Force 插入力	EIA-364-13	The insertion force test shall be done at a maximum rate of 12.5mm/min. 插入的速度为12.5mm/分钟	0.5~2.0Kgf
6	Unmating Force 拔出力	EIA-364-13	The extraction force test shall be done at a maximum rate or 12.5mm/min. 拔出的速度为12.5mm/分钟	Initial：0.8~2.0Kgf After 500 to 10,000 cycles：0.6~2.0Kgf
7	Durability 寿命	EIA 364-09	Operation Speed：200±50 cycle/Hour. Durability Cycles：10000 Cycles 插拔速度：200±50 次/小时 测试周期：10000 次	initial.：40 m Ω Max after test：50mΩ Max 初始阻抗 40mΩ最大， 测试后阻抗值 50mΩ最大
8	Vibration 振动	EIA-364-28	Frequency: 10-55-10Hz/ minute Amplitude: 1.52mm Direction: Each of X,Y,Z-axis directions * Each axis shall be at right angles to others. Period: 2 hours for each direction 频率:10-55-10Hz /分钟 振幅:1.52 毫米 方向:每一个 X,Y,z 轴方向 每个轴应与其他轴成直角。 周期:每个方向 2 小时	Appearance:No Damage 外观:无损坏 initial.：40 m Ω Max after test：50mΩ Max 初始阻抗 40mΩ最大， 测试后阻抗值50mΩ最大 There shall be no current discontinuity longer than 1 microsecond. 不存在电流间断超过1微秒。

All specifications and details published are subject to change without notice.
Please don't reproduce or copy by any means.

9	Solder ability 可焊性	EIA 364-52	Solder pot temperature: 245±5℃, 5sec. 焊接剂温度：245±5℃，5 秒	The inspected area of each lead must have 95% solder coverage minimum. 焊接剂覆盖面积最少 95%
ENVIRONMENTAL REQUIREMENTS（环境性能）				
10	Thermal Shock 冷热冲击	EIA 364-32	1 cycle consists of: - 30 ± 3 °C for 30 minutes +80 ± 3°C for 30 minutes Total cycles: 25 cycles 1 循环包括: -30±3°C 30 分钟 +80±3°C 30 分钟 总周期:25 个周期	1).Shall meet visual requirement, show no physical damage. 2). Contact resistance; After test: 50mΩ max. 3）Insulation resistance; 100MΩmin. 1）满足视觉要求，无物理损伤。 2). 接触电阻试验后：50mΩ max. 3）绝缘电阻：100Ωmin
11	Humidity 恒温恒湿	EIA 364-31	The specimen shall be placed in a humidity chamber of the following conditions. Temperature: 40 ± 2 °C Relative humidity: 90 to 95 % Period: 240 hours 测试件应置于以下条件的温湿度室中： 温度：40 ± 2 °C 相对湿度：90 ~ 95% 持续时间：168 小时	1).Shall meet visual requirement, show no physical damage. 2). Contact resistance; After test: 50mΩ max. 3）Insulation resistance; 100MΩmin. 1）满足视觉要求，无物理损伤。 2). 接触电阻试验后：50mΩ max. 3）绝缘电阻：100Ωmin
12	Temperature Life 高温老化	EIA 364-17	Mated Connector Temperature: 85 ± 2 °C Period: 250 hours 配对的连接器 测试温度：85 ± 2 °C 持续时间：250 小时	1).Shall meet visual requirement, show no physical damage. 2). Contact resistance; After test: 50mΩ max. 3）Insulation resistance; 100MΩmin. 1）满足视觉要求，无物理损伤。 2). 接触电阻试验后：50mΩ max. 3）绝缘电阻：100Ωmin

All specifications and details published are subject to change without notice.
Please don't reproduce or copy by any means.

13	Salt Spray 盐雾	EIA 364-26	Subject mated connectors to 35+/-2 ℃ and 5+/-1% salt condition for **48hours**. After test, rinse the sample with water and recondition the room temperature for 1 hour. 产品对插后放至温度 35℃±2℃，盐水浓度 5±1%环境中储存 48 小时。测试之后，用水清洗后再空气中放置 1 小时。	No detrimental corrosion allowed in contact area and base metal exposed. （Don't include solder area） 产品接触区域与金属外露区域无氧化腐蚀（不包括焊接区区域）
14	Humidity-Temperature Cycle 温湿度循环	EIA 364-31	Method II Test Condition A. Subject mated connectors to 96 hours at 40°C with 90% to 95% RH. 使对插的连接器在温度 40℃湿度 90%-95%的环境下保持 96 小时	1.Contact resistance: 40 mΩ MAX 2.Appearance: No physical damage shall occur. 1. 接触阻抗初始 40mΩ最大 2. 外观：表面无物理损伤
15	**Resistance to Reflow Soldering Heat** 耐焊接热	Solder Temp:260±5℃, 20～40sec. 焊锡温度：260±5℃, 20～40sec. 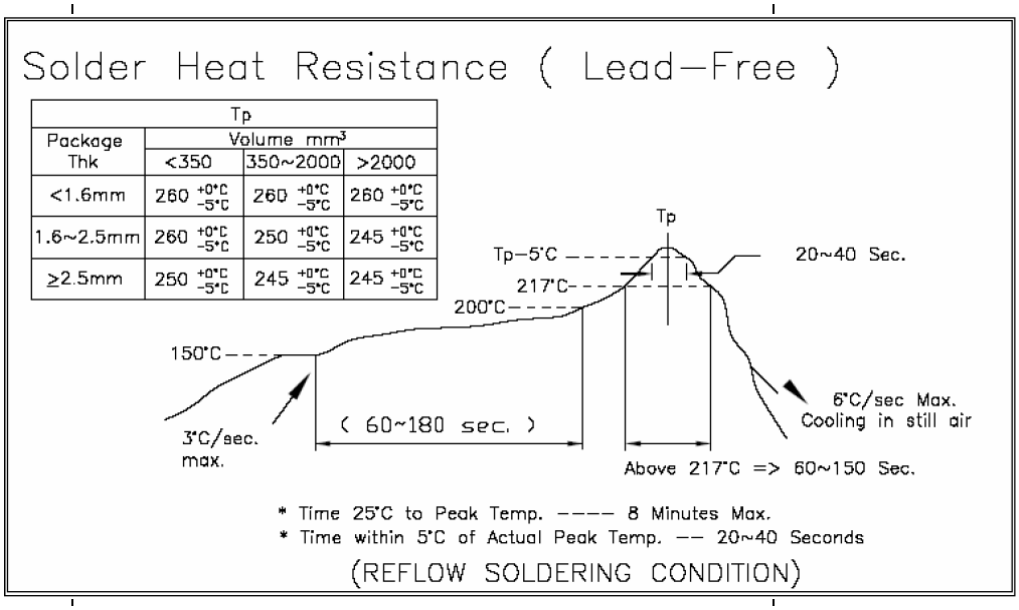 No physical damage shall occur. (不可有损坏)

All specifications and details published are subject to change without notice.
Please don't reproduce or copy by any means.

Figure 1

Note1：Shall meet visual requirements, show no physical damage, and meet requirement of additional tests as specified in the test sequence in Figures 2

说明一：测试要求不能有物理损坏，测试依据表格二的顺序进行。

6. PRODUCT QUALIFICATION AND REQUALIFICATION TEST：

(产品测试顺序表)

Test or Examination	Test Group								
	A	B	C	D	E	F	G	H	I
	Test Sequence								
Examination of Product 产品外观	1. 13	1. 5	1. 9	1. 9	1. 7	1. 7	1. 5	1. 3	1. 3
Contact Resistance 接触阻抗	2. 10	2. 4	2. 8	2. 8	2. 5	2. 5	2. 4		
Insulation Resistance 绝缘阻抗	3. 11		3. 6	3. 6	3. 6	3. 6			
Dielectric Withstanding Voltage 耐电压	4. 12		4. 7	4. 7					
Mating Force 插入力	5. 8								
Unmating Force 拔出力	6. 9								
Durabilit 寿命	7								
Vibration 振动							3		
Solder ability 可焊性								2	
Thermal shock test 冷热冲击					4				
Humidity 恒温恒湿			5						
Temperature Life 高温老化						4			
Salt Spray 盐雾		3							
Humidity-Temperature Cycle 温湿度循环				5					
Resistance to Reflow Soldering Heat 耐焊接热									2
Samples Size (Min) 测试样品数量（最少）	5	5	5	5	5	5	5	5	5

Figure 2

Note 2：（a）Numbers indicate sequence in which tests are performed.

（b）Discontinuities shall not take place in this test group, during tests.

说明二：（a）测试依照矩阵要求数量进行测试

（b）在测试中，群组测试不能间断.

 All Rights Reserved.
All specifications and details published are subject to change without notice.
Please don't reproduce or copy by any means.