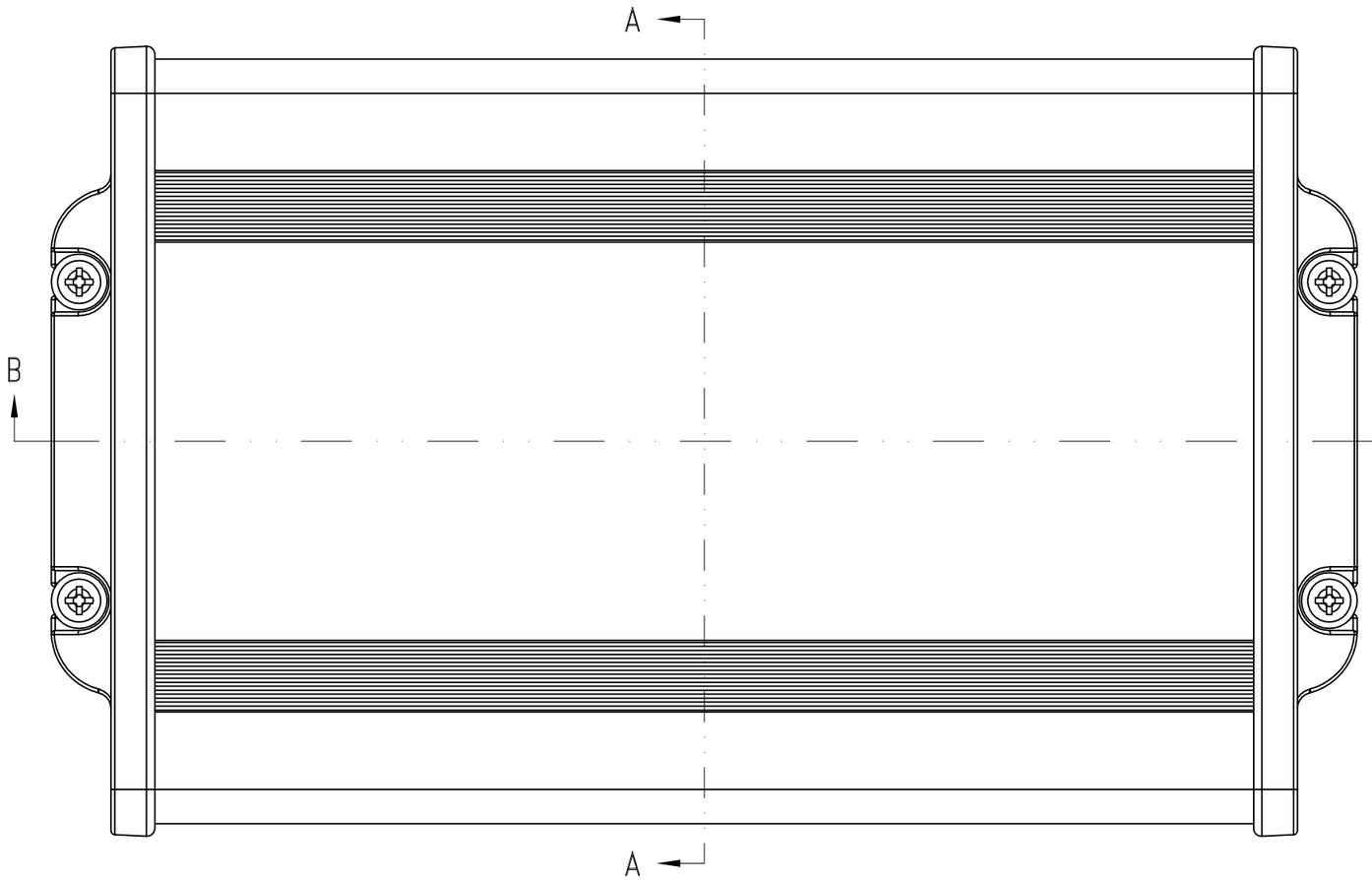

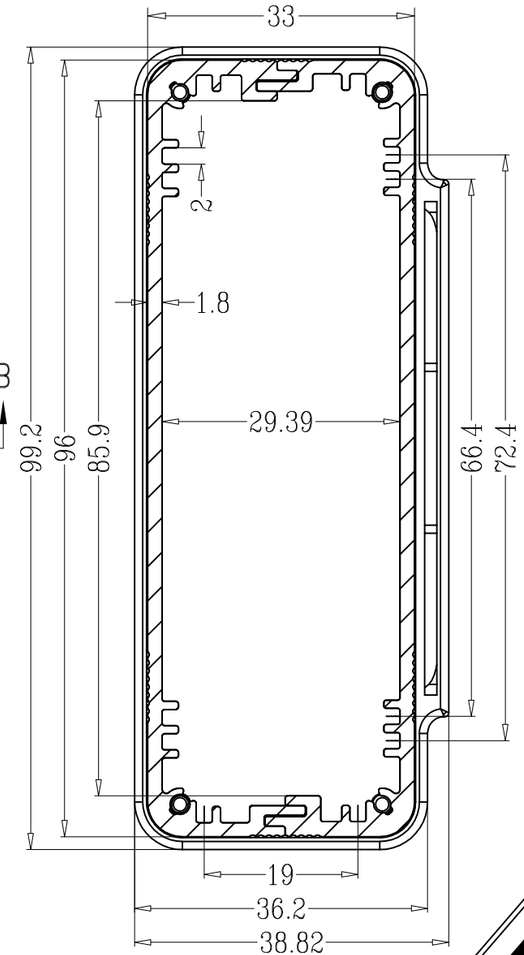

SEC A-A

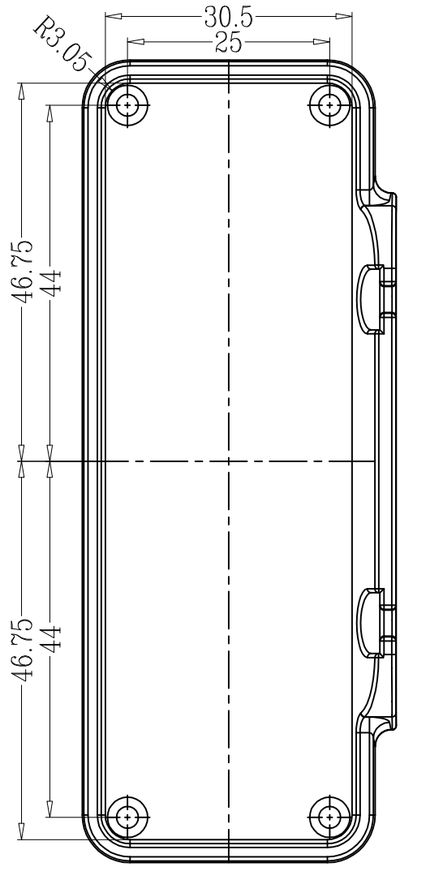

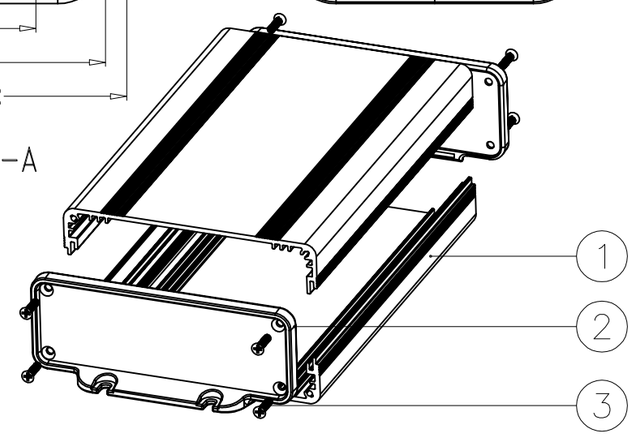

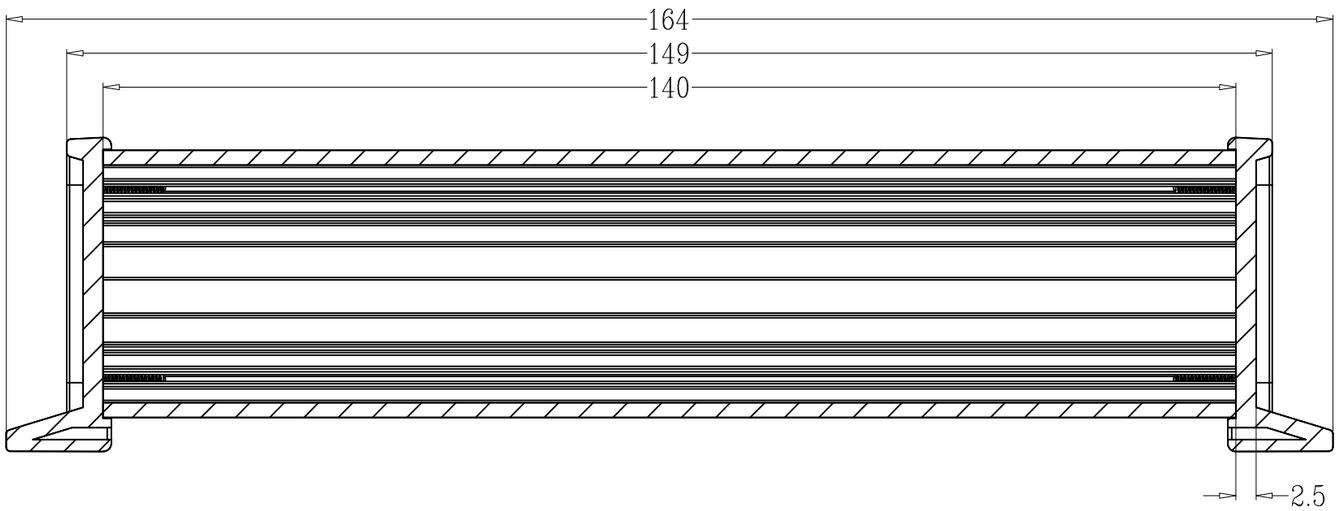

SEC B-B

3	screws	STD	8	KM2.5X10			
2	panel	ABS	1	12001-B1			
1	Al profile	AL	2	11001-A1			
Drawing	Auditing	Confirm	Product Name	Aluminum case	Project View		A
			Product Type	BAW 12001-A W140	Drawing Scale	1:1 (MM)	

www.bahar-enclosure.com

BAHAR ENCLOSURE GmbH