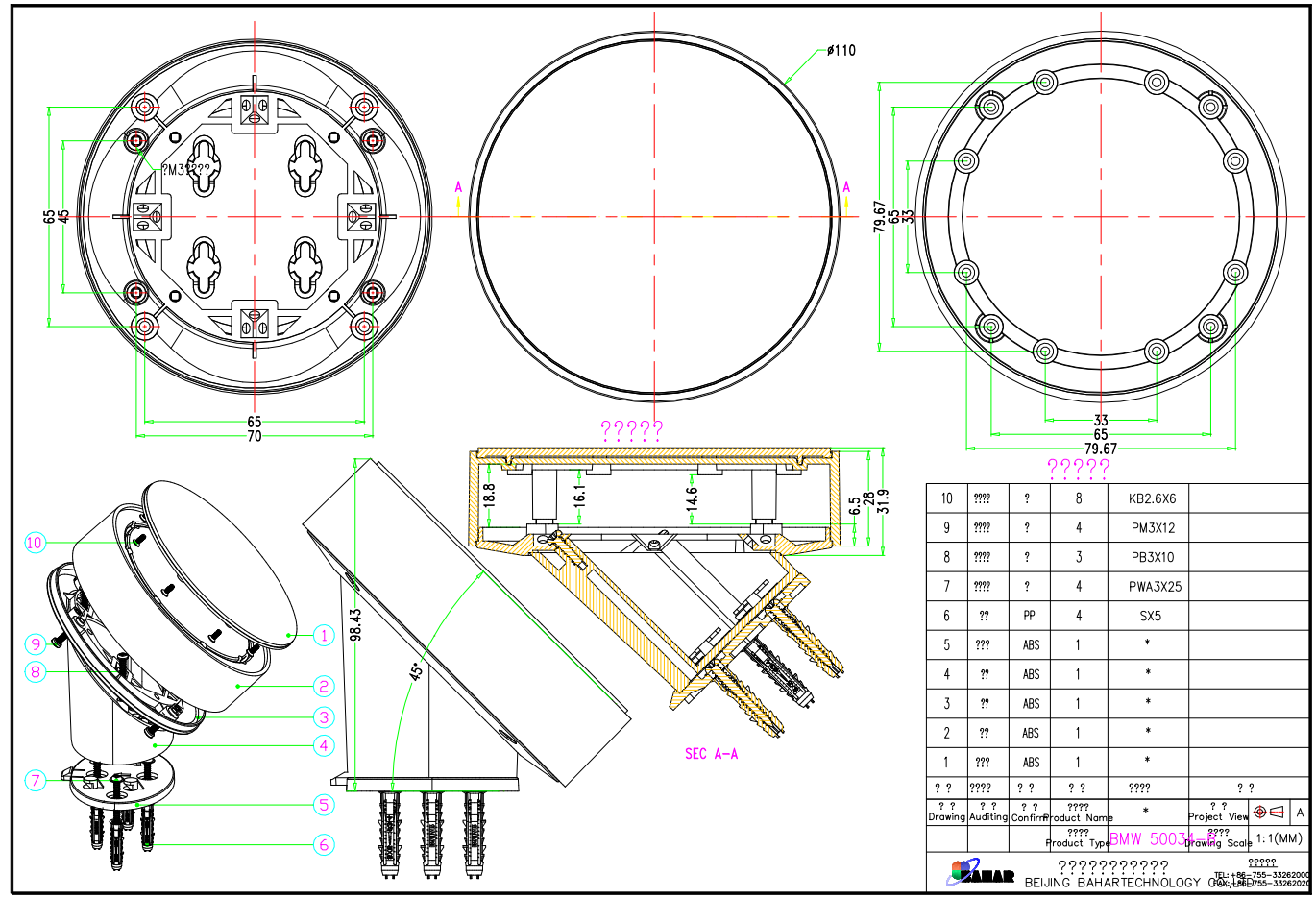

10	????	?	8	KB2.6X6	
9	????	?	4	PM3X12	
8	????	?	3	PB3X10	
7	????	?	4	PWA3X25	
6	??	PP	4	SX5	
5	???	ABS	1	*	
4	??	ABS	1	*	
3	??	ABS	1	*	
2	??	ABS	1	*	
1	???	ABS	1	*	
? ?	????	? ?	? ?	????	? ?
? ? Drawing	? ? Auditing	? ? Confirm	???? Product Name	*	? ? Project View
			???? Product Type	BMW 50034-R	???? Drawing Scale 1:1(MM)

A

????????????
BEIJING BAHARTECHNOLOGY CO., LTD.

?????
TEL:+86-755-33262000
FAX:+86-755-33262020