BWP 10021

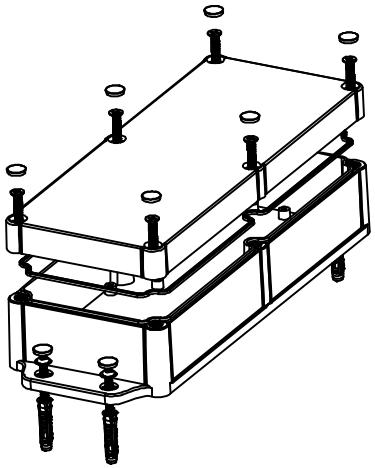

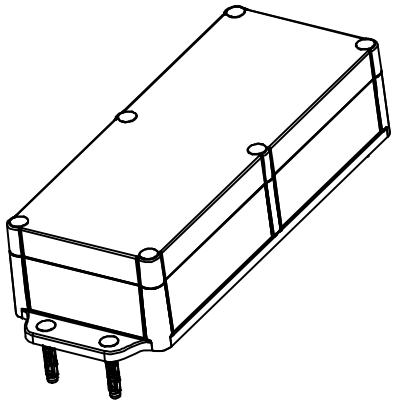

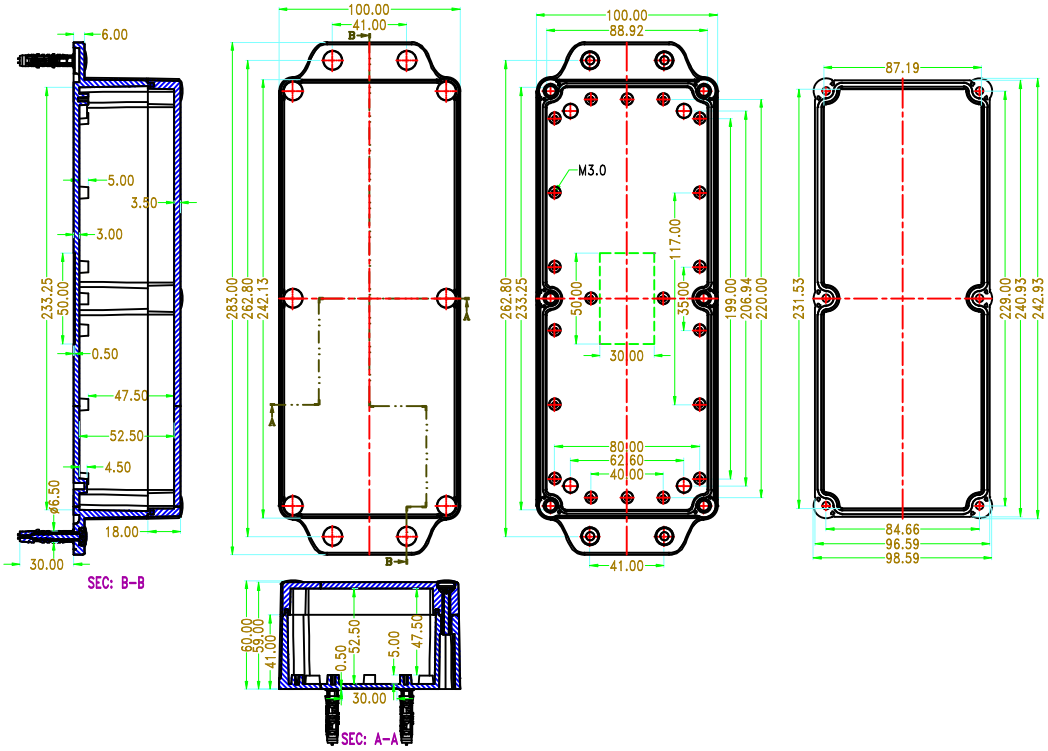

6.00
5.00
3.50
3.00
233.25
50.00
0.50
47.50
52.50
4.50
ø6.50
18.00
30.00
SEC: B-B
100.00
41.00
283.00
262.80
242.13
60.00
59.00
41.00
0.50
52.50
5.00
47.50
30.00
SEC: A-A
100.00
88.92
M3.0
117.00
50.00
35.00
30.00
80.00
62.60
40.00
41.00
262.80
233.25
199.00
206.94
220.00
87.19
231.53
229.00
240.93
242.93
84.66
96.59
98.59