PART NUMBER SYSTEM

CPCB 1207 – 101M

- 101M: Inductance
- 1207: Dimensions
- CPCB: Type

DIMENSIONS

UNIT：mm

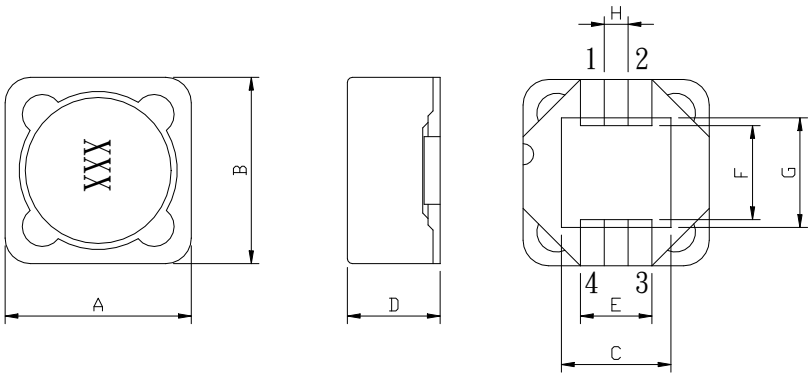

A=12.5 Max. B=12.5 Max. C=7.0 Ref. D=8.0 Max. E=5.0 Ref. F=5.7±0.05 G=7.2 Ref. H=1.8 Ref.

SCHEMATIC DRAWING

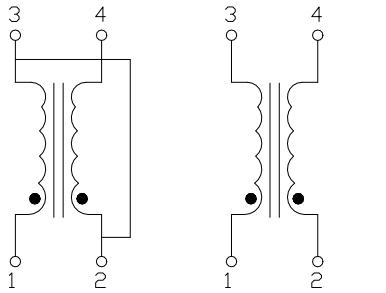

PCB PATTERN

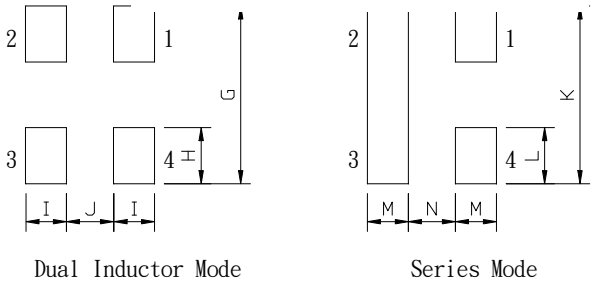

G=13.8 H=3.85 I=2.5 J=0.5 K=13.8 L=3.85 M=2.5 N=0.5

SERIES LIST

No.	TYPE / PART NUMBER	INDUCTANCE (μH)	Parallel Ratings OCL±20% (μH)	I rms (A)	I sat (A)	DCR (Ω) (Max.)	Series Ratings OCL±25% (μH)	I rms (A)	I sat (A)	DCR (Ω) (Max.)
1	**CPCB1207-R47M-LF**	0.47	0.419	17.9	56.0	0.00244	1.676	8.94	28	0.0098
2	**CPCB1207-1R0M-LF**	1.00	0.821	15.5	40.0	0.00326	3.284	7.74	20	0.0130
3	**CPCB1207-1R5M-LF**	1.50	1.357	13.5	31.1	0.00426	5.428	6.77	15.6	0.0171
4	**CPCB1207-2R2M-LF**	2.20	2.027	12.5	25.5	0.00466	8.108	6.23	12.7	0.0201
5	**CPCB1207-3R3M-LF**	3.30	2.831	10.4	21.5	0.00709	11.32	5.23	10.8	0.0286
6	**CPCB1207-4R7M-LF**	4.70	4.841	8.25	16.5	0.01146	19.36	4.13	8.24	0.0459
7	**CPCB1207-6R8M-LF**	6.80	7.387	7.34	13.3	0.0145	29.55	3.67	6.67	0.0581
8	**CPCB1207-8R2M-LF**	8.20	8.861	6.32	12.2	0.0196	35.44	3.16	6.09	0.0784
9	**CPCB1207-100M-LF**	10.0	10.47	6.04	11.2	0.0215	41.88	3.02	5.60	0.0858
10	**CPCB1207-150M-LF**	15.0	14.09	5.03	9.66	0.0309	56.36	2.51	4.83	0.1238
11	**CPCB1207-220M-LF**	22.0	22.93	4.00	7.57	0.0489	91.72	2.00	3.78	0.1963
12	**CPCB1207-330M-LF**	33.0	33.92	3.23	6.22	0.0750	135.7	1.61	3.11	0.3013
13	**CPCB1207-470M-LF**	47.0	47.05	2.95	5.28	0.0899	188.2	1.47	2.64	0.3600
14	**CPCB1207-680M-LF**	68.0	66.48	2.44	4.44	0.1313	265.9	1.22	2. 22	0.5263
15	**CPCB1207-820M-LF**	82.0	79.75	2.09	4.06	0.1788	319.0	1.04	2.03	0.7163
16	**CPCB1207-101M-LF**	100	99.31	1.96	3.64	0.2038	397.2	0.980	1.82	0.8163
17	**CPCB1207-151M-LF**	150	144.9	1.59	3.01	0.3088	579.6	0.796	1.51	1.2363
18	**CPCB1207-221M-LF**	220	221.5	1.29	2.43	0.4700	866.0	0.645	1.22	1.88
19	**CPCB1207-331M-LF**	330	323.6	1.04	2.01	0.7175	1294	0.522	1.01	2.88
20	**CPCB1207-471M-LF**	470	467.1	0.85	1.68	1.0763	1868	0.427	0.838	4.30
21	**CPCB1207-681M-LF**	680	676.7	0.76	1.39	1.3500	2707	0.380	0.697	5.40
22	**CPCB1207-821M-LF**	820	818.1	0.65	1.27	1.8376	3272	0.325	0.633	7.35
23	**CPCB1207-102M-LF**	1000	1005	0.61	1.14	2.0750	4020	0.307	0.571	8.30

- Inductors tolerance M=±20%.
- I sat : DC current at which the inductance drops 30% (typ) from its value without current.
- Operating temperature range -40℃ to +125℃ .
- Electrical specifications at 25℃ .

PACKAGING

(AEC-Q200)

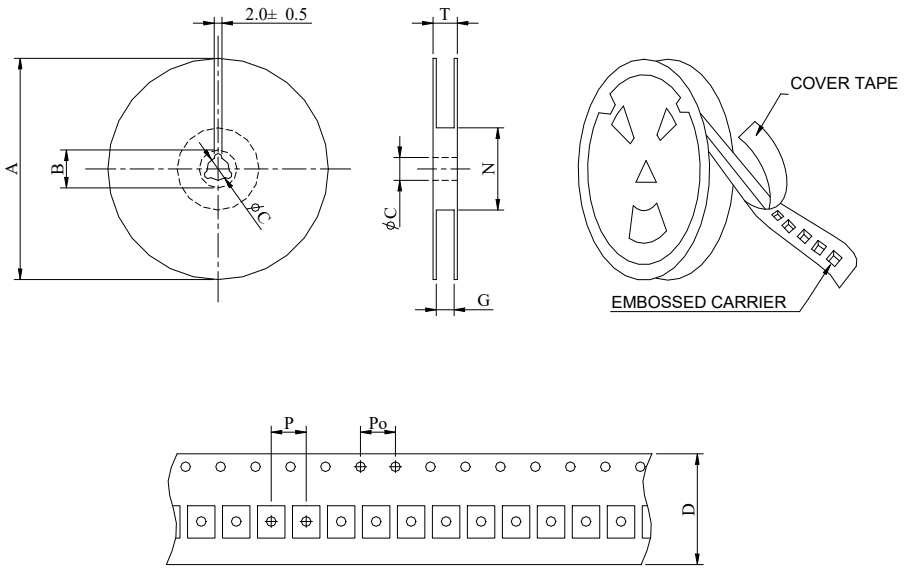

SERIES	STAYLE	Q'TY (PCS)	DIMENSIONS (m/m)								
			A	B±0.8	C±0.5	D	G^{+0}	N^{-0}	P	Po	T
CPCB1207	13-24	400	330	21	13	24	26	50	20	4	30.4