PART NUMBER SYSTEM

CPCWI 3225 – 101 K

- Tolerance
- Inductance
- Dimensions
- Type

FEATURES :

1. Low DC resistance & high current handling capacities , making them ideal for power supply line applications.
2. CPCWI3225 products conforms to the standards that are slated to be introduced under the RoHS Directive.
3. Applications for personal computers , portable telephones , hard disk drives and other electronic equipment .
4. They are available in ranging from 2012 to 3225 types .

DIMENSIONS

UNIT：mm



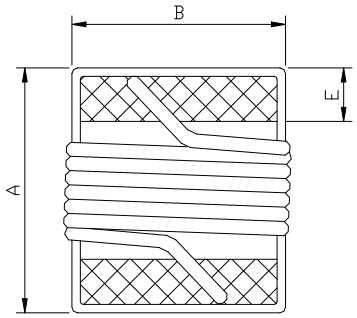

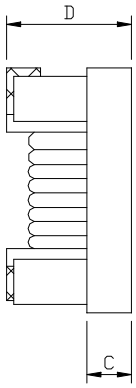

A=3.6 Max. B=2.9 Max. C=1.1 Ref. D=2.4 Max. E=0.50±0.1

RECOMMENDED PATTERNS

UNIT：mm

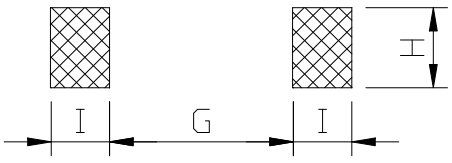

G=2.0 H=2.70 I=1.20

SERIES LIST

No.	PART NUMBER	INDUCTANCE (uH)	TOLERANCE	Q. MIN.	SRF (MHz) MIN.	DCR (Ω) (max)	IDC (mA) (max)
1	**CPCWI3225-1R0□**	1.0 @7.96MHz	J,K,M	35@7.96MHz	340	0.125	2600
2	**CPCWI3225-1R2□**	1.2 @7.96MHz	J,K,M	35@7.96MHz	280	0.135	2400
3	**CPCWI3225-1R5□**	1.5 @7.96MHz	J,K,M	30@7.96MHz	160	0.145	2200
4	**CPCWI3225-1R8□**	1.8 @7.96MHz	J,K,M	30@7.96MHz	120	0.160	2000
5	**CPCWI3225-2R2□**	2.2 @7.96MHz	J,K,M	30@7.96MHz	100	0.170	1900
6	**CPCWI3225-2R5□**	2.5 @7.96MHz	J,K,M	30@7.96MHz	80	0.190	1700
7	**CPCWI3225-3R3□**	3.3 @7.96MHz	J,K,M	30@7.96MHz	70	0.210	1500
8	**CPCWI3225-4R7□**	4.7 @7.96MHz	J,K,M	28@7.96MHz	55	0.300	1300
9	**CPCWI3225-6R8□**	6.8 @7.96MHz	J,K,M	28@7.96MHz	45	0.370	1100
10	**CPCWI3225-100□**	10 @2.52MHz	J,K,M	22@2.52MHz	47	0.500	900
11	**CPCWI3225-120□**	12 @2.52MHz	J,K,M	22@2.52MHz	42	0.680	820
12	**CPCWI3225-150□**	15 @2.52MHz	J,K,M	22@2.52MHz	34	0.720	740
13	**CPCWI3225-220□**	22 @2.52MHz	J,K,M	22@2.52MHz	25	1.030	640
14	**CPCWI3225-330□**	33 @2.52MHz	J,K,M	20@2.52MHz	13	1.370	500
15	**CPCWI3225-470□**	47 @2.52MHz	J,K,M	22@2.52MHz	12	1.880	440
16	**CPCWI3225-680□**	68 @2.52MHz	J,K,M	22@2.52MHz	10	3.000	360
17	**CPCWI3225-820□**	82 @2.52MHz	J,K,M	22@2.52MHz	10	4.100	320
18	**CPCWI3225-101□**	100 @1MHz	J,K,M	15@1MHz	8	4.682	280
19	**CPCWI3225-151□**	150 @1MHz	J,K,M	13@1MHz	7	6.102	220
20	**CPCWI3225-181□**	180 @1MHz	J,K,M	13@1MHz	3	7.100	200
21	**CPCWI3225-221□**	220 @1MHz	J,K,M	13@1MHz	3	7.650	200
22	**CPCWI3225-331□**	330 @1MHz	J,K,M	13@1MHz	3	12.62	160
23	**CPCWI3225-471□**	470 @1MHz	J,K,M	13@1MHz	3	25.00	120
24	**CPCWI3225-681□**	680 @1MHz	J,K,M	13@1MHz	2	31.00	100

- Inductance and SRF are measured in HP-E4991A impedance analyzer with HP-16197A fixture.
- Inductance Tolerance: K=10% ; M=20%
- RDC is measured in Chroma 16502 mill ohm meter. (or equivalent)

PACKAGING

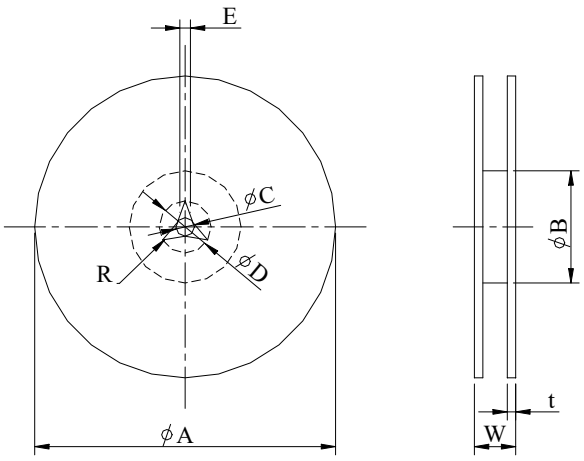

	A	B	C	D	E	W	t	R
T(ψ178mm) Reel	ψ180	ψ60	ψ13	—	—	14.4	—	—

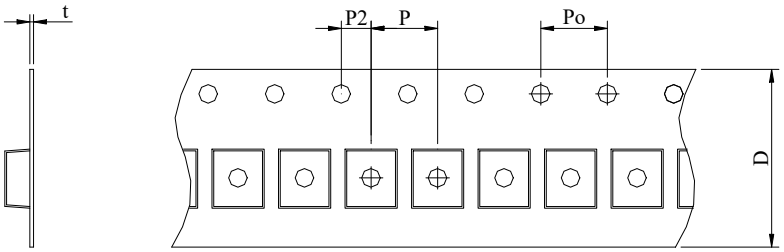

TYPE	Reel/pcs	P	Po	P2	t	D
CPCWI3225	2000	4	4	2	1	8