REV.	DESCRIPTION OF REVISIONS	APPR.	DRAW.	RELEASE	DATE
X1					
X2					

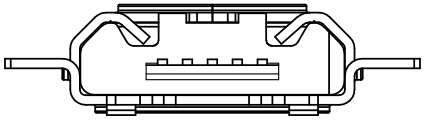

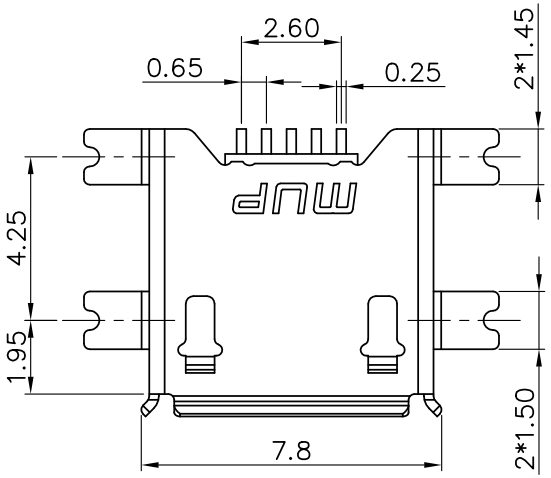

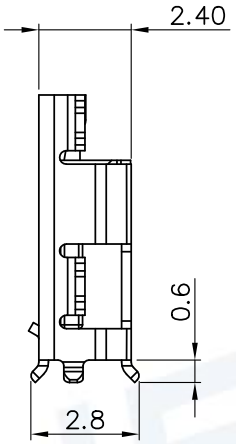

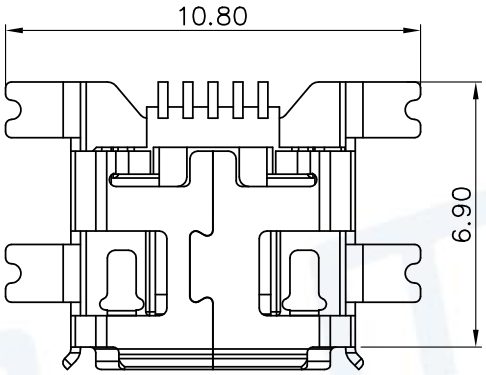

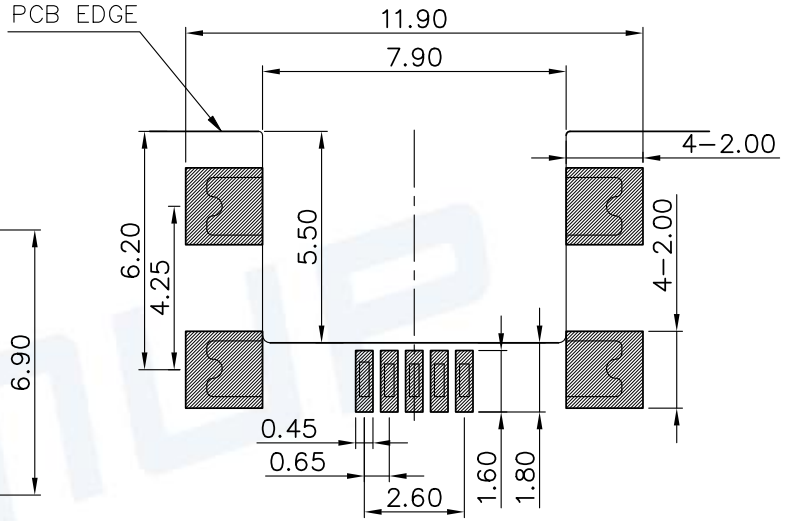

RECOMMENDED P.C.B LAYOUT
COMPONENT SIDE(TOLERANCE ±0.05)

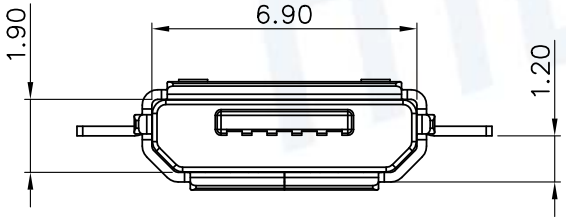

TECHNICAL CHARACTERISTICS

1.General Characteristics
Durability: 3,000 cycles min.

2.Electrical Characteristics
Contact resistance: 40mΩ typical,80mΩ max
Insulation resistance: >1000MΩ/250V DC

3.Solderability
Vaporphase: 215°C±5°C,30sec.Max
IR reflow: 250°C,5sec.Max
Manual soldering: 370°C,3sec.Max

4.Environmental Characteristics
Operating temperature: −40°C~+85°C
Operating humidity: 10%~+95%RH

ITEM	PART NAME	Q'TY	MATERIAL	FINISH
1	BASE	1	LCP 30%GF	Black UL94V-0
2	SHELL	1	Copper Alloy	Tin plated over all
3	DATA CONTACT	5	Copper Alloy	Contact area:Gold plated

Unless otherwise specified, other tolerance are:

X ±0.35	X° ±5°		
X.X ±0.25	X.X° ±4°		
X.XX ±0.15	X.XX° ±3°		
X.XXX ±0.10	X.XXX° ±2°		

MUP® MUP INDUSTRIAL CO.,LTD.

NAME: **Micro USB Connector**
MODEL NO: **MUP-U526-4**
TYPE : **Downing1.20(SMTx4)**

PROJ.	UNIT	SCALE
	MM	1:1

DRAWN	Zoey	Jun.14.2012
CHECKED	Jimmy	Jun.14.2012
APPROVAL	Simon	Jun.14.2012

DWG NO.: DWG-MUP-U526-004
SHEET 1/1
REVISION X1

Pb RoHS PROCESS COMPLIANT

CUSTOMER DRAWING