SAMPLE APPROVAL

Model No.: MUP-U526-4

Revision: 1.0

Issue Date: Dec.12.2015

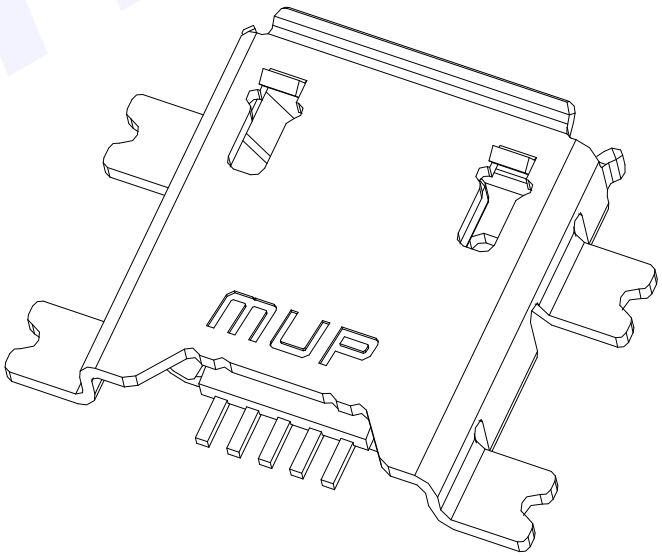

MUP INDUSTRIAL CO., LTD

LingWu Industrial Park, Junzibu, Guanlan Street, Baoan District Shenzhen, China

TEL: 0755-29673656/57/58 **FAX: 0755-29673655**

E-Mail: sales@mupconnector.com **URL: Http:// www.mupconnector.com**

 All Rights Reserved.
All specifications and details published are subject to change without notice.
Please don't reproduce or copy by any means.

1 Scope

This specification defines the detailed requirements for the MUP's USB (Universal Serial Bus) Series Connector. This specification covers the materials, ratings, electrical, mechanical and environmental performance of the applicable product description and test method.

2 Applicable Documents

The following documents form a part of this specification to the extent specified herein, In the event of conflict between the requirements of this specification and the product drawing, the product drawing shall take precedence. In the event of conflict between the requirements of this specification and the referenced documents，this specifications shall take precedence.

2.1 Commercial Standards And Specification:

MIL-STD-202/1344 Test methods for electrical connectors.

EIA 364 Test methods for electrical connectors.

3 Requirements

3.1 Design and Construction

Product shall be of the design, construction and physical dimensions specified on the applicable product drawing.

3.2 Materials

A. Insulator: High-temp thermoplastic,UL94V-0
Color: Black.

B. Terminal: Copper Alloy
Finish: (a) Contact Area: Gold plated over Nickel

C. Shell: Copper Alloy
Finish: (a) Solderable Nickel plated over all

3.3 Ratings

Operating Current Rating: Power (1,5Pin): 1.8A Signal (2,3,4Pin): 1A

Voltage Rating: 30V DC

Operating Temperature : -40℃ to 85℃

Storage Temperature :-40℃ to 85℃

Humidity: 95% max. (No condensing)

 All Rights Reserved.
All specifications and details published are subject to change without notice.
Please don't reproduce or copy by any means.

3.4 Test Requirements and Procedures Summary

Test Description	Requirement	Procedure
Examination of Product	Meets requirements of product Drawing. No physical damage.	Visual inspection, Confirmed by using proper measuring insulator.
Electrical Performance		
Low Level Contact Resistance	Contact Resistance shall not exceed. Initial: 50mΩ Max.	EIA 364-23(or MIL-STD-1344A,Method 3002.1,Test Condition B) Subject mated contacts assembled in housing to 20Mv maximum open circuit at 100mA maximum
Insulation resistance	Initial: 1000MΩ Min After Test:1000MΩ Min	EIA 364-21(or MIL-STD-202F,Method 302,Test Condition B) Test between adjacent contacts of mated and unmated connector assemblies
Dielectric Withstanding Voltage	250V AC for one minute at sea level 1).No flashover or insulation breakdown 2).Leakage current:0.5mA Maximum	EIA 364-20(or MIL-STD-202F,Method 301,Test Condition B) Test between adjacent contacts of mated and unmated connector assemblies
Contact Capacitance	2PF Maximum per contact	EIA 364-30 Test between adjacent circuits of unmated connector at 1 kHz
Contact Current Rating	1).No flashover or insulation breakdown 2). current:2A	EIA 364-70 Method B When measured at an ambient temperature of 25℃.With Power applied to the contacts, the△T shall not exceed +30℃at any point in the USB connector under test
Mechanical Performance		
Random vibration	1).No discontinuities of 1 sec or longer duration 2).Shall meet visual requirement, show no physical damage. 3).Shall meet requirements of additional tests as specified in Test Sequence in Section 5	EIA 364-28 Test Condition V Test Letter A, (or MIL-STD-202F, Method 214, Test Condition 1, Test Letter A) Subject mated connector to 5.35 G'srms. Fifteen minutes in each of three mutually perpendicular planes
Physical Shock	1).No discontinuities of 1μ sec or longer duration 2).Shall meet visual requirement, show no physical damage. 3).Shall meet requirements of additional tests as specified in Test Sequence in Section 5	EIA 364-27 Test Condition H(or MIL-STD-202F,Method 214B) Subject mated connector to 30 G's half-sine shock pulses of 11ms duration. Three shocks in each direction applied along three mutually perpendicular plans.18 total shocks.
Durability	1).Shall meet visual requirement, show no physical damage. 2).Shall meet requirements of additional tests as specified in Test Sequence in Section 5	EIA 364-09 Mate and unmated connector assemblies for 5000cycles at minimum rated of 200 cycles per hour

All specifications and details published are subject to change without notice.
Please don't reproduce or copy by any means.

Connector Mating Force	1).Initial: 35 Newton（or 3.57Kgf）Maximum 2).After Test:35 Newton(or 3.57Kgf)Maximum	EIA 364-13 Shall be measured with Tension Gauge or Tension Tester. Measure force necessary to mate assemblies at maximum rate of 12.5mm(or0.492")per minute
Connector Unmated Force	1).Initial: 7 Newton（or 0.71gf）Minimum	EIA 364-13 Shall be measured with Tension Gauge or Tension Tester. Measure force necessary to mate assemblies at maximum rate of 12.5mm(or0.492")per minute
Environmental Performance		
Operation thermal shock	1).Shall meet visual requirement, show no physical damage. 2).Shall meet requirements of additional tests as specified in Test Sequence in Section 5	EIA 364-32 Test Condition1(or MIL-STD-202F,Method 107G,Test Condition A) Subject mated connector to five cycles between-40℃+85℃
Humidity	1).Shall meet visual requirement, show no physical damage. 2).Shall meet requirements of additional tests as specified in Test Sequence in Section 5	EIA 364-31 Test Condition A Method III(or MIL-STD-202F,Method 103B,Test Condition B) Subject mated connector to 168 hours(seven complete cycles)
Temperature life	1).Shall meet visual requirement, show no physical damage. 2).Shall meet requirements of additional tests as specified in Test Sequence in Section 5	EIA 364-17 Test Condition 3 Method A Subject mated connector to Temperature life at 85℃for 250hours
Solder ability	Solder Tail shall be covered more than 95% of immersed area with flash solder.	EIA 364-52(or MIL-STD-202F, method 208) Solder temperature: 250℃±5℃ Period: 5±0.5sec.
Salt spray	No harmful corrosion	MIL-STD-202F, method101D Temperature:35℃±2℃ Concentration: 5%　　Period: 24 hours.
Resistance to Soldering heat	No mechanical defect on housing or other parts。	1).For Wave Soldering: MIL-STD-202F, Method 210A, Test Condition B. Pre Heat:80℃，60sec. Temperature:215℃±5℃ Immersion duration:30±10sec.
		1).For Manual Soldering: MIL-STD-202F, Method 210A, Test Condition A. Pre Heat: No. Temperature:360℃±10℃ Immersion duration:3.5±0.5sec.
		1).For Reflow Soldering: EIAJ RCX-0101/102. Pre Heat:150(min)-200(max)℃，60-180sec. Temperature:250℃±5℃ Immersion duration:10±1sec.

 All Rights Reserved.
All specifications and details published are subject to change without notice.
Please don't reproduce or copy by any means.

3.5 Product Qualification And Test Sequence

Test or Examination	Test Group									
	A	B	C	D	E	F	G	H	I	J
Resistance to Reflow Physical Surface Heat	1,11	1,5	1,7	1,4	1,3	1, 3				
Examination of Product	3,8	2,4								
Low Level Contact Resistance			3							
Insulation Resistance			4							
Dielectric Withstanding Voltage			2							
Contact Capacitance	3									
Contact Current Rating				3						
Operating random vibration	6									
Physical Shock	7									
Durability	5									
Connector Mated Force	2,10									
Connector Unmated Force	4,9									
Thermal Shock			5							
Humidity			6							
Temperature Life		3								
Solder ability										
Salt spray						2				
Resistance to Soldering Heat				3	2					
Sample Quantity(pcs)(Minimum)	5	5	5	5	5	5	5	5	5	

NOTE :(a) Samples shall be prepare in accordance with applicable manufacture's instructions and shall be selected at random from current production

Each test groups shall consist of a minimum of five connectors

(b) The numbers in the table indicate sequence in which tests are performed.

 All Rights Reserved.
All specifications and details published are subject to change without notice.
Please don't reproduce or copy by any means.

3.6 Recommended IR Reflow Condition

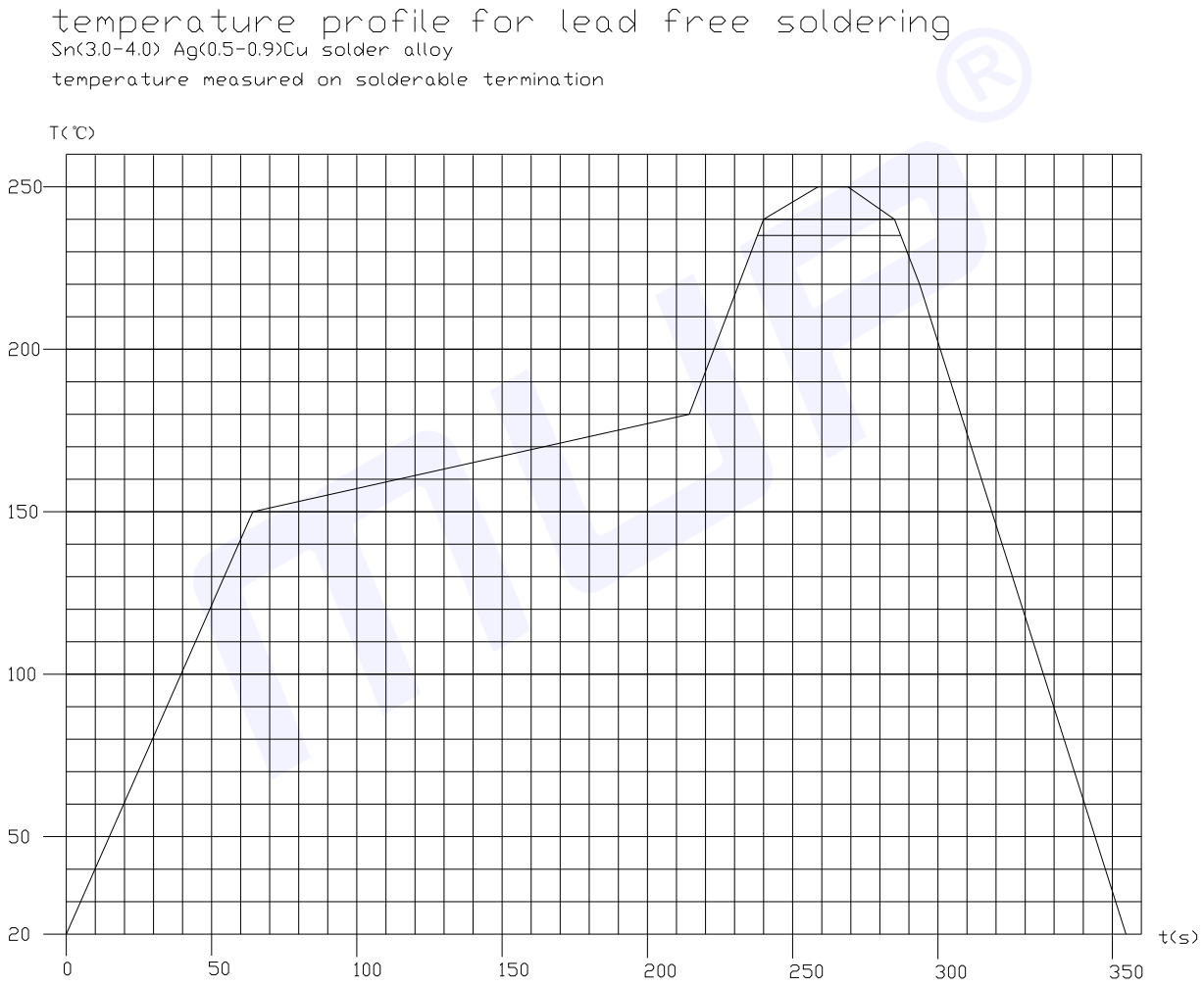

Parameter	Specification
Average temperature gradient in preheating	2.5 ℃/s
Preheating temperature	150℃~200℃
Soak time	120s~180s
Time above 217℃	40s~120s
Peak temperature in reflow	235℃~250℃
Time at peak temperature	10s~50s
Temperature gradient in cooling	Max-5℃/s

MUP INDUSTRIAL CO., LTD. All Rights Reserved.
All specifications and details published are subject to change without notice.
Please don't reproduce or copy by any means.

4 MECHANICAL OUTLINE DRAWING

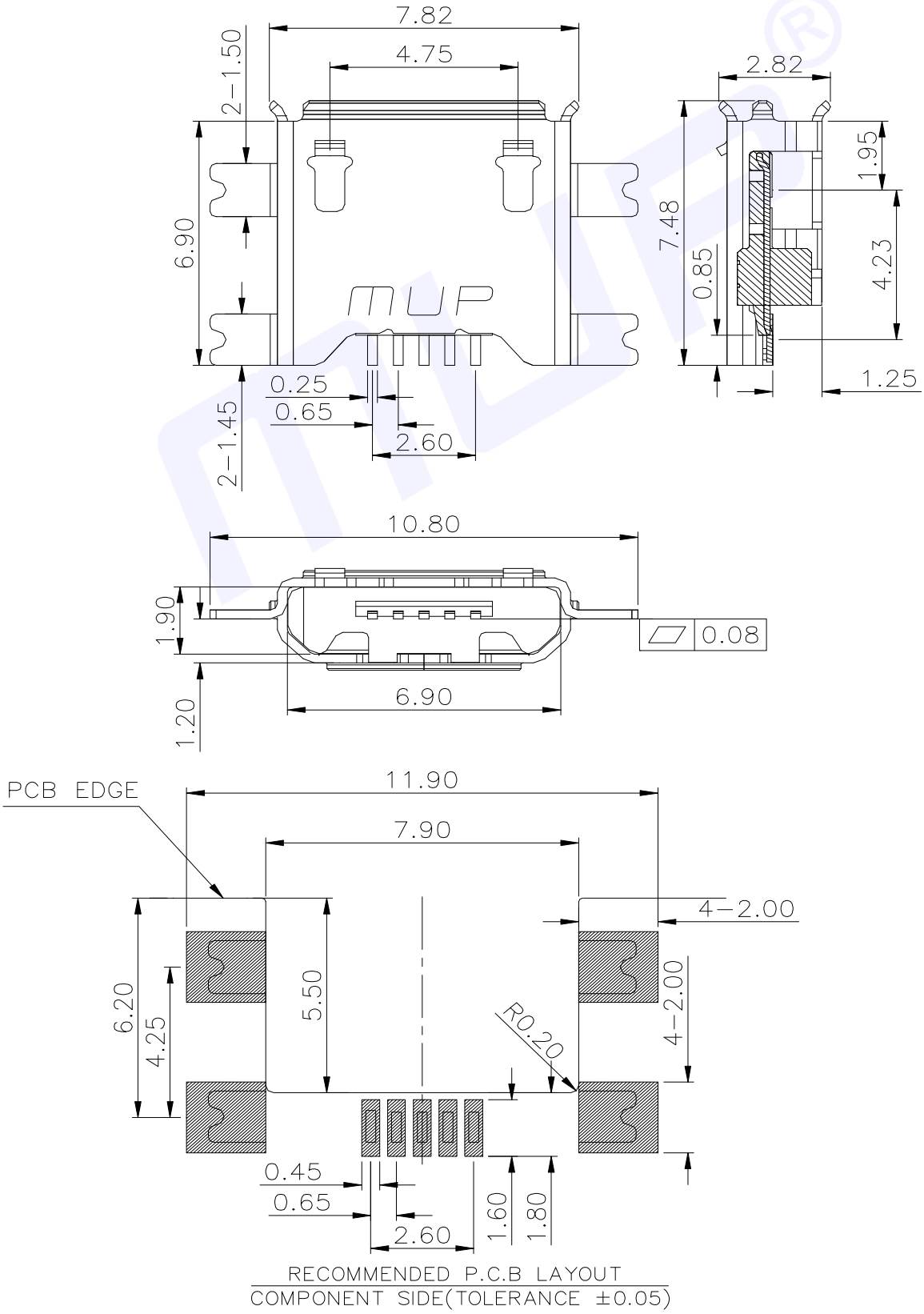

All specifications and details published are subject to change without notice.
Please don't reproduce or copy by any means.

5 PACKING INFORMATION

5.1 Carrier Dimensions Diagram

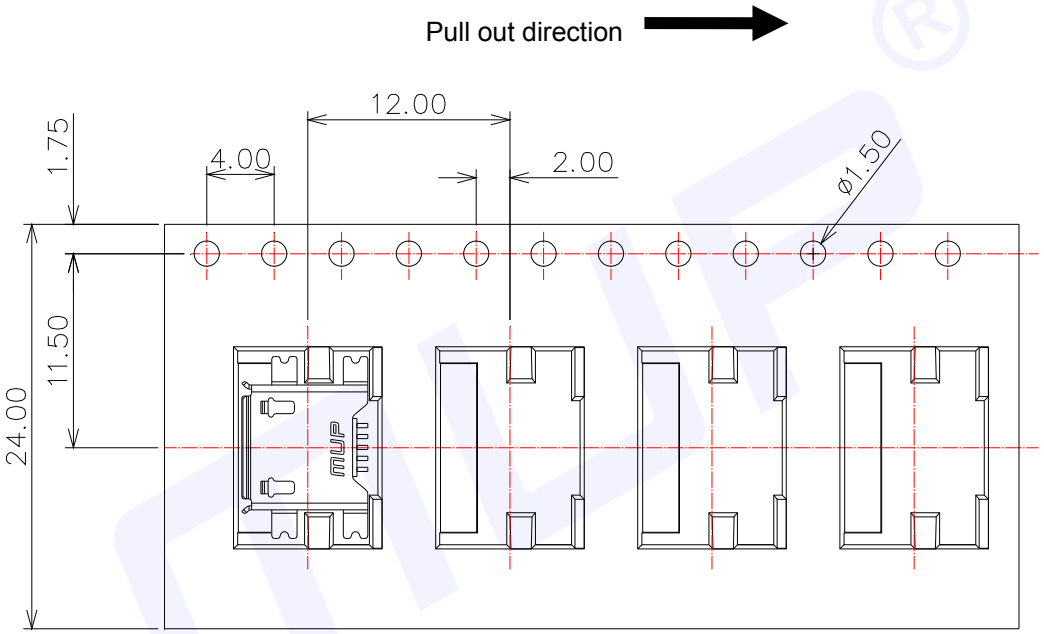

5.2 Reel Form Diagram

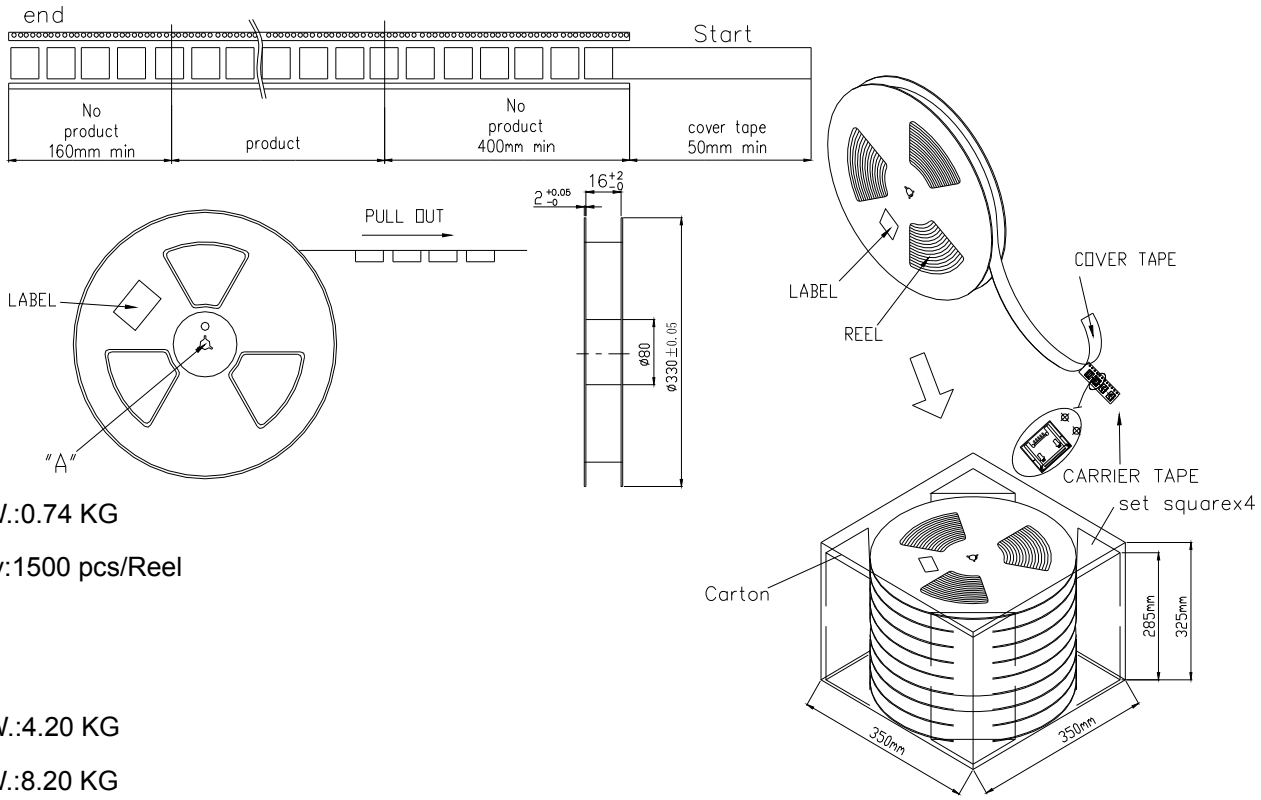

G.W.:0.74 KG

Q'ty:1500 pcs/Reel

N.W.:4.20 KG

G.W.:8.20 KG

Q'ty: 15000 pcs per Carton (10Reel set in order)

Meas: 35.00L×35.00W×31.50H cm

 All Rights Reserved.
All specifications and details published are subject to change without notice.
Please don't reproduce or copy by any means.