TIANGXI
COMPONENTS

APPROVAL SHEET

RoHS Compliant

(Glass Type)

CUSTOMER:	
DESCRIPTION:	SMD5032 12.000MHz Quartz Crystal Resonator
MANUFACTURER PART NO.:	QS 12.000MHz 50ppm 8pF -20~70°C
CUSTOMER PART NO:	
USED IN MODEL:	
REVISION	A1

承　　认　　APPROVAL		
工程部 TECHNOLOGY DEPT.	品质部 QUALITY DEPT.	采购部 PURCHASING DEPT.

Date: March 6, 2023

Rev	Revise page	Revise contents	Date	Ref.No.	Reviser
A1	ALL	Initial released	2023.03.06	N/A	DavidJiang

1. QUARTZ CRYSTAL UNIT SPECIFICATION

1.1 Nominal Frequency :	12.000MHz
1.2 Holder type :	FTX531GA（SMD5032 Glass 2PAD）
1.3 Mode of oscillation:	Fundamental
1.4 Frequency tolerance:	±50ppm at 25℃±3℃
1.5 Equivalent resistance:	60ohms max
1.6 Operating temperature range:	-20℃ To +70℃
1.7 Storage temperature range:	-55℃ To +125℃
1.8 Frequency Stability:	±50ppm at -20℃ To +70℃
1.9 Loading capacitance (CL) :	8pF
1.10 Drive level:	100 uW Typical（300 uW max）
1.11 Shunt Capacitance:	5.0pF max
1.12 Insulation resistance :	More than 500MΩ at DC 100V
1.13 Circuit:	Measured in HP/E5100A,S&A 250B
1.14 Aging:	±3 ppm Max (+25℃ 1st Year)
1.15 Dimensions and marking	Refer to page.3
1.16 Emboss carrier tape & reel	Refer to page.5 and page.6

1.17 Note:

Standard atmospheric conditions

Unless otherwise specified, the standard range of atmospheric conditions for making measurement and tests are as follow:

Ambient temperature : 25±3℃

Relative humidity : 40%~70%

2. FTX531GA MARKING & DIMENSIONS

(UNIT: mm)

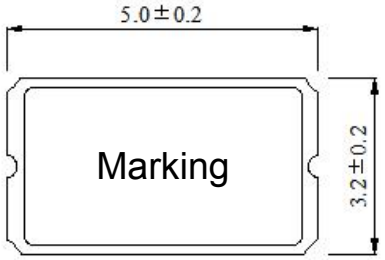

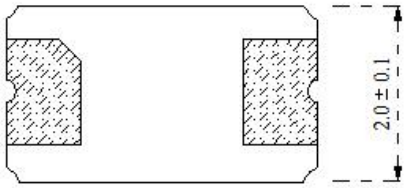

Bottom View

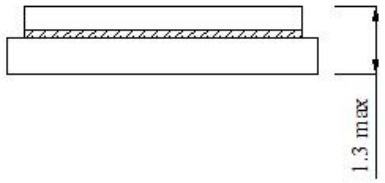

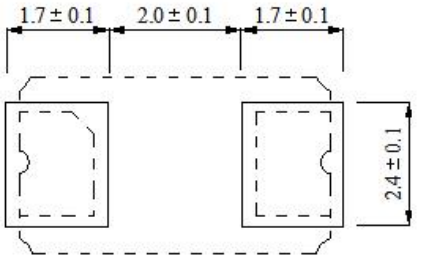

Recommended Solder Pad Layout

or

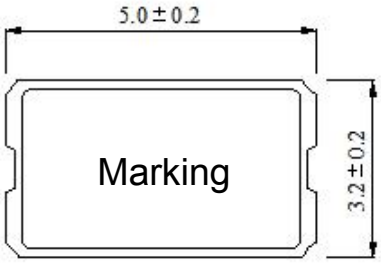

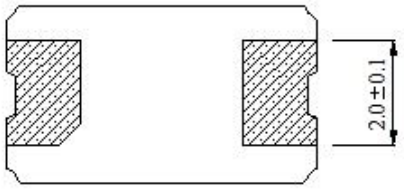

Bottom View

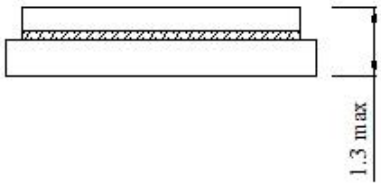

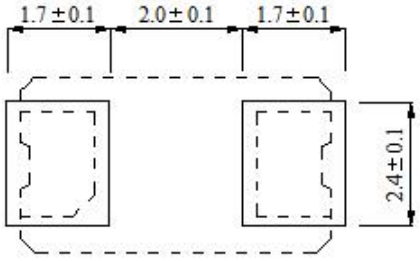

Recommended Solder Pad Layout

*Marking should be printed as following:

Logo, Nominal Frequency

*Manufacturing Logo: FT

*Nominal frequency = 3 number after decimal point MAX.

(ex. 12.000 MHz → 12.000)

Marking: Laser marking or Ink marking.

3. INSIDE STRUCTURE

Reference drawing

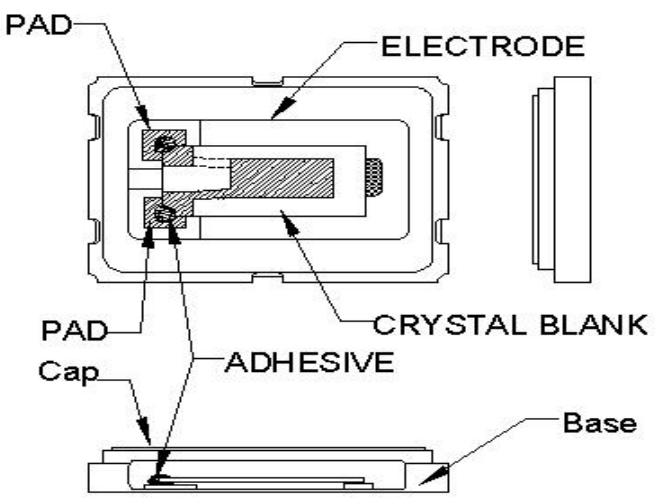

Base: Alumina Ceramic (Al_2O_3) Metallized Pad: W Ni Plating Au Plating
Cap: Alumina Ceramic (Al_2O_3)
(3) Crystal Enclosure Seal: Seal Glass
(4) Crystal Blank Rectangular At-Cut Quartz Crystal Blank
(5) Adhesive Silver Conductive Polyimide Resin
(6) Electrode Ag
(7)PAD Alumina Ceramic (W. Ni. Au)

4. FTX531G EMBOSS CARRIER TAPE & REEL

a.) Dimensions of Carrier Tape

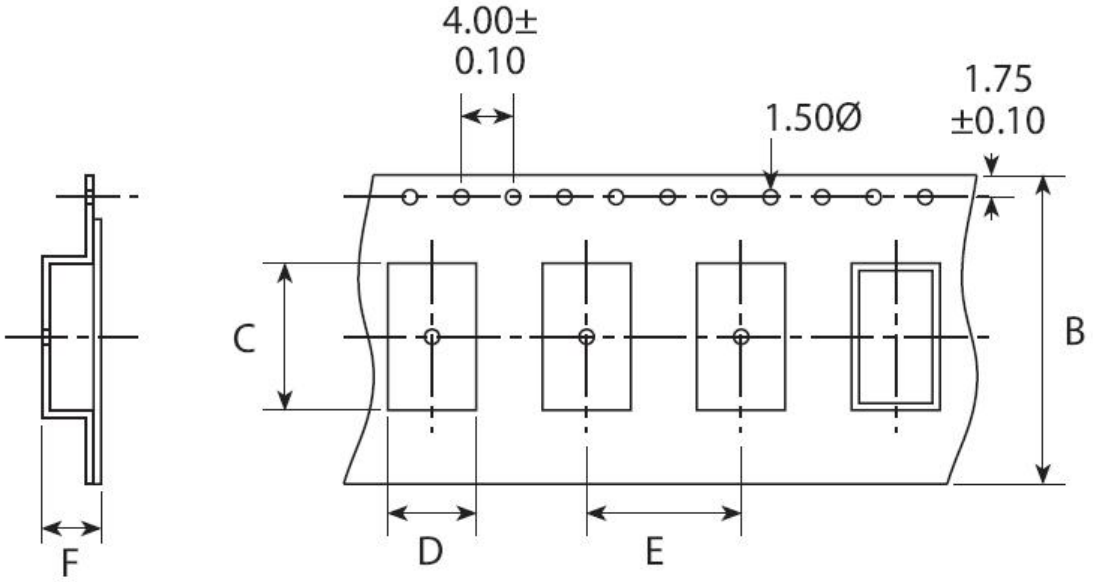

	A	B	C	D	E	F	G
SMD5032	178±2.0	12.0±0.3	5.4±0.1	3.6±0.1	8.0±0.1	1.6±0.1	60.5±1.0

(UNIT: mm)

b.) Dimensions of Reel

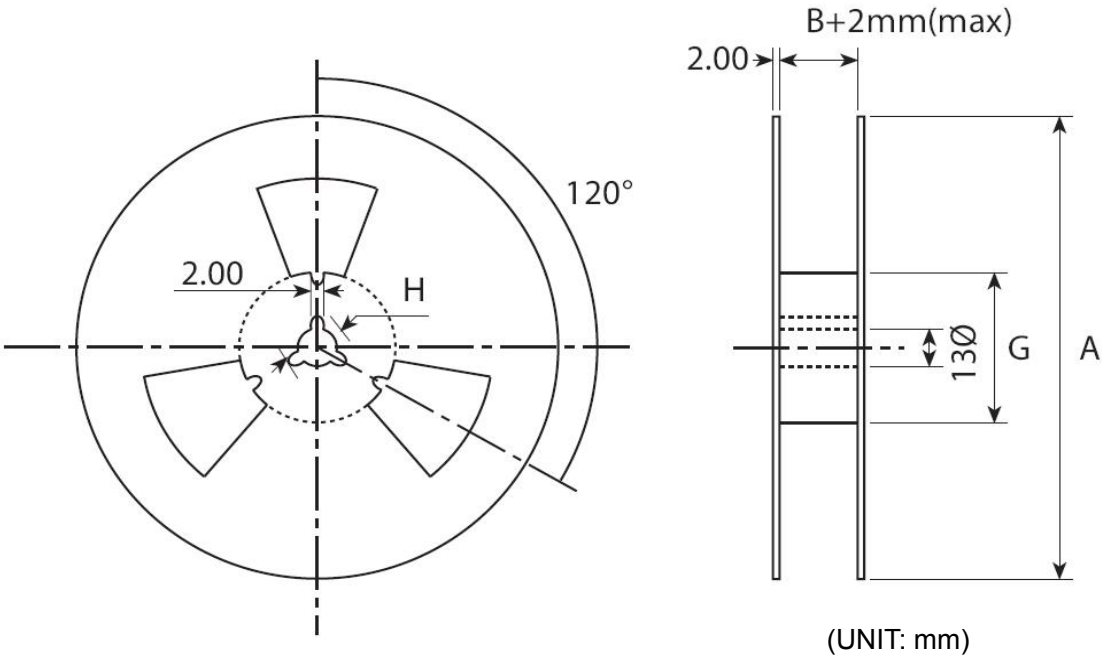

(UNIT: mm)

c.) Storage condition

Temperature: +40deg.C Max.

Relative Humidity: 80% Max.

d.) Standard packing quantity

1,000PCS / REEL

e.) Material of the tape

Tape	Material
Carrier tape	A – PET
Top tape	Polyester

f.) Label contents

.The type of product

.Our specification No.

.Your Part No.

.Lot No.

.Nominal Frequency

.Quantity

.Our Company Name

Sticks label for every reel.

PART NUMBER	
PO NO	
PR. NO:	
HOLDER TYPE	
FREQUENCY	
REMAKS	
QUANTITY	
TIANGXI COMPONENTS CO., LTD.	

g.) Taping dimension

Leader	Cover-tape	The length of cover-tape in the leader is more than 400 mm including empty embossed area.
	Carrier-tape	After all products were packaged, must remain more than twenty pieces or 400 mm empty area, which should be sealed by cover-tape.
Terminal	Cover-tape	The tip of cover-tape shall be fixed temporary by paper tape and roll around the core of reel one round.
	Carrier-tape	The empty embossed area which are sealed by top cover-tape must remain more the 40 mm.

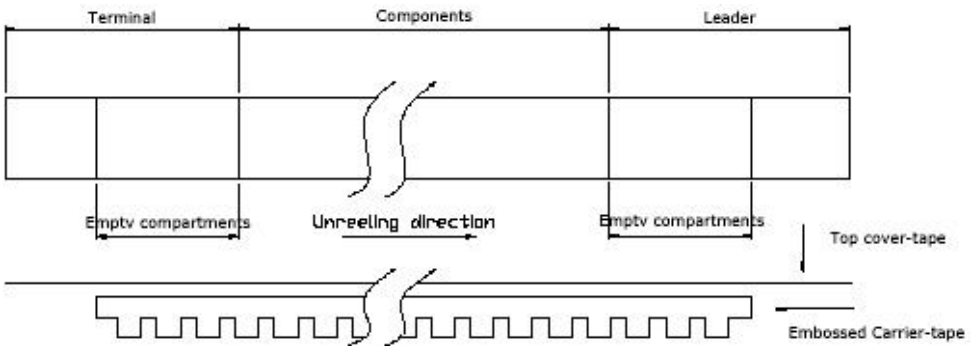

h.) Joint of tape

The carrier-tape and top cover-tape should not be jointed.

i.) Release strength of cover tape

It has to between 0.1N to 0.7N under following condition.

Pulling direction 165° to 180°

Speed 300mm/min.

Otherwise unless specified.

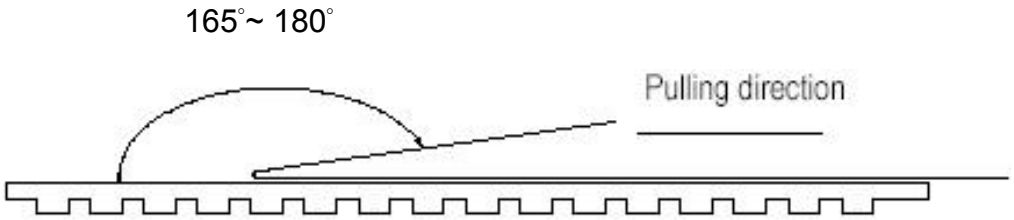

Other standards shall be based on JIS C 0806-1990.

5. Mechanical Endurance: Provided that measurement shall be carried out afterletting it alone in the room temperature for 1 hour.

	Item	Conditions	Specifications
5.1	Drop	Fall freely from 100 cm of height 3 times on a firm wood	MIL-STD-202F-203B
5.2	Mechanical Shock	Device are shocked to half sine wave (1000 G) three mutually perpendicular axes each 3 times.	MIL-STD-202F
5.3	Vibration	(1)Vibration Frequency: 10~55Hz (2)Cycle: 1 to 2 Min. (3)Full Cycle: 1.5mm P-P. (4)Direction: X.Y.Z (5)Time: 2 Hours / Each Direction	MIL-STD-883E
5.4	Substrate Bending	Mount the specimen on substrate. Apply the following pressure Direction: see Fig –1 Speed: 0.5 mm/sec Hours: 5 ± 1 sec Amount of substrate: 3 mm Max.	Without mechanical damage such as breaks. Without electrode peeling. Electrical characteristics shall be satisfied.
5.5	Adhesion	Mount the specimen on substrate. Apply the following pressure Direction: see Fig –2 Weight: 10N Hours: 10 ± 1 sec	
5.6	Body strength	Mount the specimen on substrate. Apply the following pressure Direction: see Fig –3 Weight: 10N Hours: 10 ± 1 sec	
5.7	Seal	Fine Leak: 4.5kgf/cm^2 2hours 1×10^{-9} Pa.m^3/sec Gross Leak: 4.5kgf/cm^2 2hours 1.5×10^{-5} Pa.m^3/sec	MIL-STD-883E

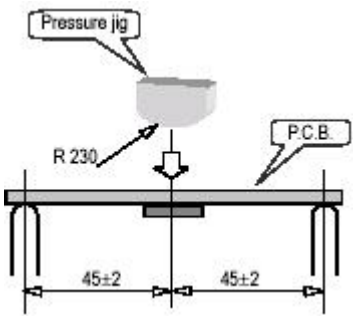

Fig-1

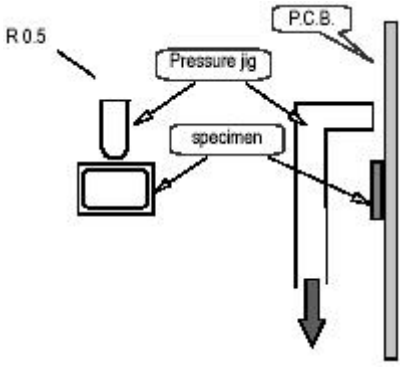

Fig-2

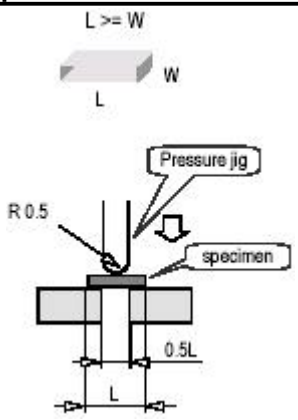

Fig-3

<table>
<tr><td>5.8</td><td>Solder ability</td><td>Pre-heat temperature : +150±10℃
Pre-heat time : 60~120s
When the temperature of the specimen is reached at +215±3℃, it shall be left for 30±1sec.
Peak temperature 240±5℃
Material: Pb-free (Sn-3.0Ag-0.5Cu)
Flux : Rosin resin methyl alcohol solvent (1:4)
The electrodes should be covered by a new solder at least 90% of immersed area.</td><td>MIL-STD-883E 2003</td></tr>
<tr><td>5.9</td><td>Resistance to Soldering Heat</td><td>Run in Reflow
Reflow soldering shall be allowed
Only two(2) time.

Available for Lead Free Soldering

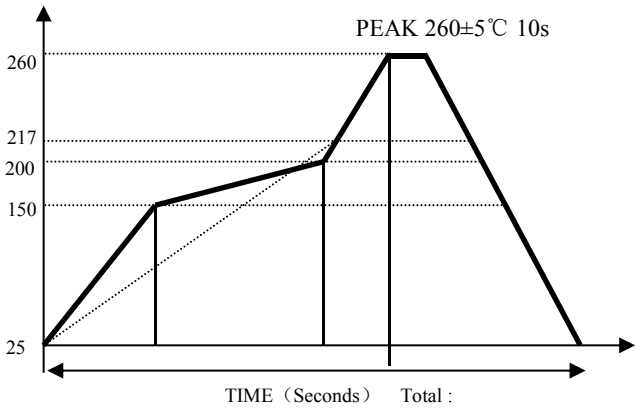

<table>
<tr><td>(1)</td><td>Preheat</td><td>160~180 deg.C</td><td>120sec.</td></tr>
<tr><td>(2)</td><td>Primary heat</td><td>220 deg.C</td><td>60sec.</td></tr>
<tr><td>(3)</td><td>Peak</td><td>260 deg.C</td><td>10sec. Max.</td></tr>
</table></td><td>MIL-STD-202F</td></tr>
</table>

6. Environmental Endurance: Provided that measurement shall be carried out afterletting it alone in the room temperature for 1 hour.

	Item	Conditions	Specifications
6.1	Humidity	+60℃±2℃,RH 80~85%, Duration of 500 hours. The units are then allowed to stand for approx 2 hours in room temperature before checking	MIL-STD-202F
6.2	Storage in Low Temperature	Temperature: -40±2℃ , Duration of 500 hours. The units are then allowed to stand at room temperature for approx 2 hours before checking.	MIL-STD-883E
6.3	Storage in High Temperature	Temperature:+85℃±2℃, Duration of 500 hours. The units are then allowed to stand at room temperature for approx 2 hours before checking.	MIL-STD-883E
6.4	Thermal Shock	Temperature 1: -55℃±5℃ Temperature 2: 125℃±5℃ Temperature change between T1 and T2 at soonest Run 100 cycles, maintain T1 and T2 30minutes each in one cycle (Refer to Fig-4)	MIL-STD-883E

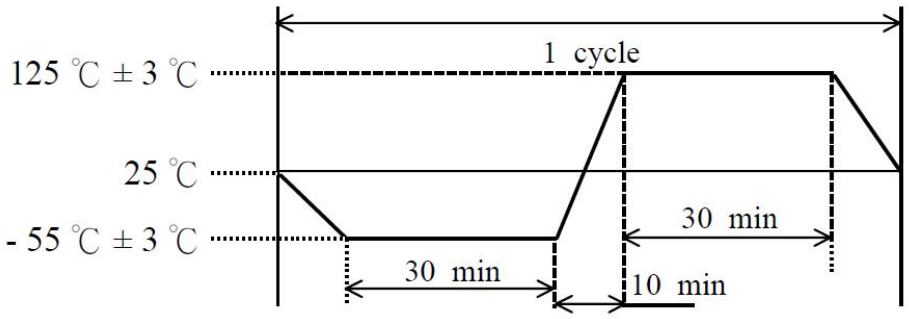

7. Recommended Solder Reflow Profile

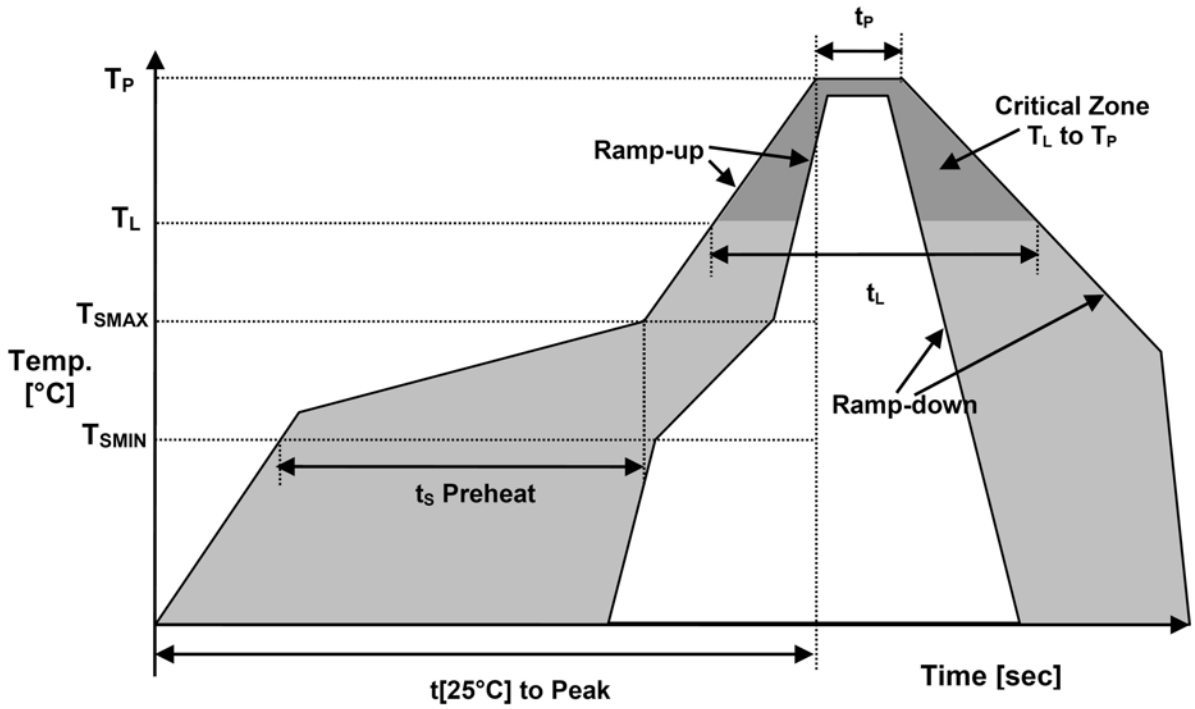

Temperature Min Preheat	T_{SMIN}	150℃
Temperature Max Preheat	T_{SMAX}	175℃
Time (T_{SMIN} to T_{SMAX})	t_S	60-180 sec.
Temperature	T_L	217℃
Peak Temperature	T_P	260℃
Ramp-up rate	R_{UP}	3℃/sec max.
Ramp-down rate	R_{DOWN}	6℃/sec max.
Time within 5°C of Peak Temperature	t_P	10 sec max.
Time t[25°C] to Peak Temperature	t[25°C] to Peak	480 sec max.
Time	t_L	60-150 sec.