TIANGXI
COMPONENTS

APPROVAL SHEET

RoHS Compliant

CUSTOMER：	**MINYX servis s.r.o.**
DESCRIPTION：	SMD1612 36.000MHz Quartz Crystal Oscillator
MANUFACTURER PART NO.：	QO 36,000MHz 25ppm 15pF -40~85°C
CUSTOMER PART NO：	
USED IN MODEL：	
REVISION	A1

承　　认　　APPROVAL		
工程部 TECHNOLOGY DEPT.	品质部 QUALITY DEPT.	采购部 PURCHASING DEPT.

Date: April 13, 2023

Rev	Revise page	Revise contents	Date	Ref.No.	Reviser
A1	ALL	Initial released	2023.04.13	N/A	DavidJiang

1. QUARTZ CRYSTAL OSCILLATOR SPECIFICATION

1.1 Frequency :	fo	36.000MHz
1.2 Holder Type :		SMD1612
1.3 Frequency Stability :	f_{STAB}	±25ppm Overall Temperature stability is Inclusive of all conditions: Calibration Tolerance at +25℃, frequency stability over the operating temperature range, supply voltage change, output load changes, shock, vibration, and 1st year aging at +25℃.
1.4 Supply Voltage :	V_{DD}	$1.8V_{DC}$±10%
1.5 Input Current :	I_{DD}	3mA max
1.6 Operable temperature range :	T_{OPR}	-40℃ To +85℃
1.7 Storage temperature range :	T_{STG}	-55℃ To +125℃
1.8 Symmetry :	SYM	45~55% (at 50% VDC)
1.9 Rise& Fall Time :	Tr / Tf	5nS max
1.10 Output Load :	RL	HCMOS 15pF
1.11 Output Low Level :	V_{OL}	$10\%V_{DD}$ max
1.12 Output High level :	V_{OH}	$90\%V_{DD}$ min
1.13 Output Wave form :		Square
1.14 Pin 1 Connection :		E/D Control
1.15 Start-up Time :	t_{str}	10mS max
1.16 Standby Current :	T_{STD}	10uA max
1.17 RMS Phase Jitter :	ϕ_J	1.0pS max (Integrated from 12KHz to 20MHz)
1.18 Aging :		Less than ±3 ppm/Year
1.19 Insulation Resistance :		500MΩ (DC100±10V)min
1.20 Output Waveform :		Refer to fig.1
1.21 Test Circuit :		Refer to fig.2

Standard atmospheric conditions

Unless otherwise specified, the standard range of atmospheric conditions for making measurement and tests are as follow:

Ambient temperature : 25±3℃

Relative humidity : 40%~70%

2. Output Waveform

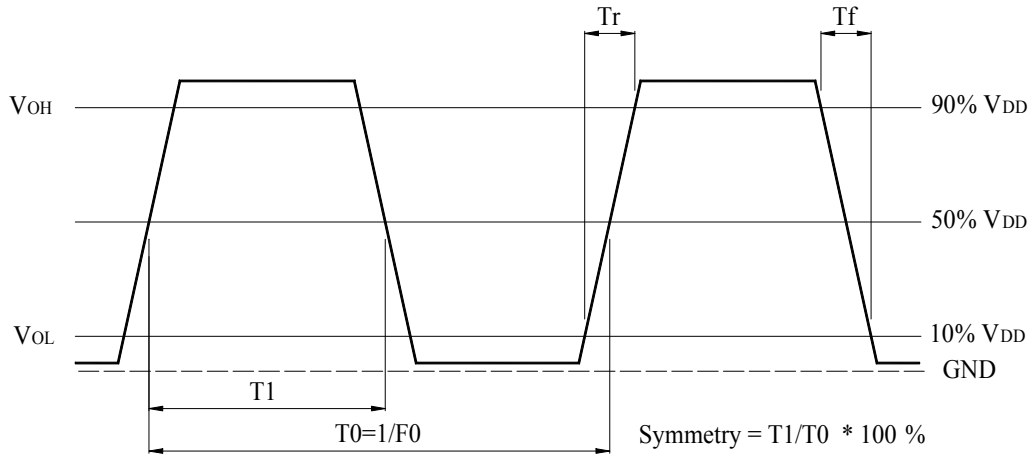

3. Test circuit

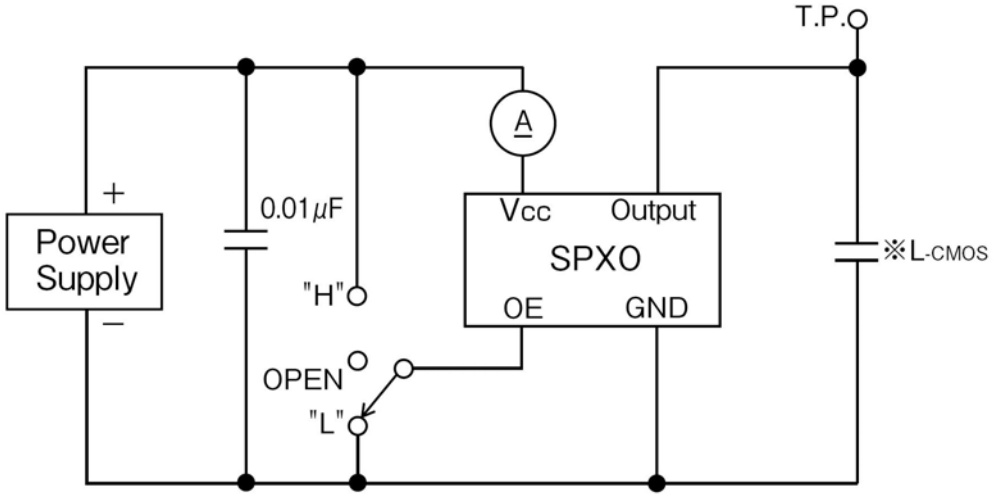

※L-CMOS: Total Fixture and Probe Capacitance

4. FXO111S MARKING & DIMENSIONS

(UNIT: mm)

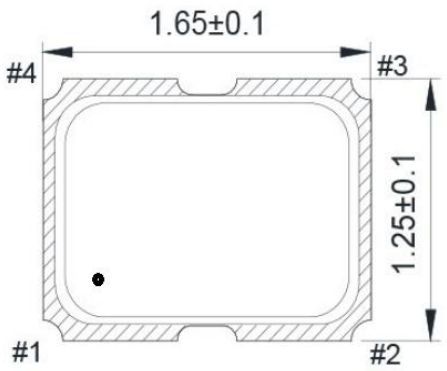

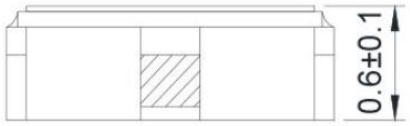

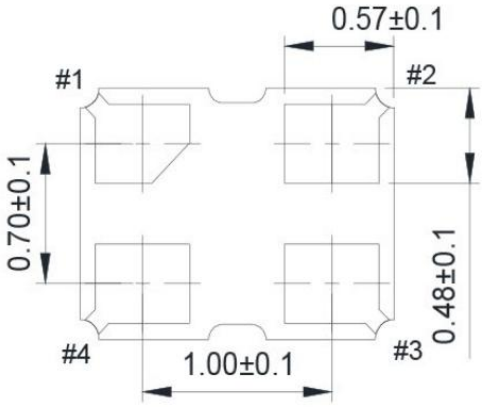

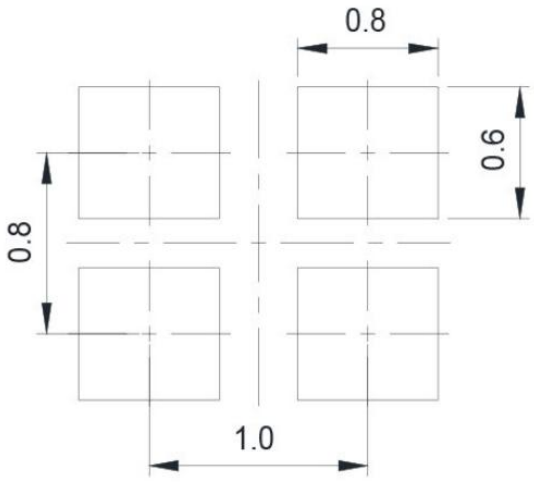

Suggested Land Pattern

Pin	Connection
1	E/D
2	GND
3	Output
4	$+V_{DD}$

Reference drawing

Base: Alumina Ceramic (Al_2O_3) Metallized Pad: W Ni Plating Au Plating
Cap: Fe-Ni
(3) Crystal Enclosure Seal: Seal Seam
(4) Crystal Blank Rectangular At-Cut Quartz Crystal Blank
(5) Adhesive Silver Conductive Polyimide Resin
(6) Electrode Ag
(7)PAD Alumina Ceramic (W. Ni. Au)

E/D：Enable/Disable Function	
Pin 1# (E/D control)	Pin 3# (output)
Open (NC)	Active
High"1" ($V_{IH} \geqslant 70\%V_{DD}$)	Active
Low"0" ($V_{IH} \leqslant 30\%V_{DD}$)	High impedance
Disabled conditions: • internal oscillator active • output disabled, high impedance **Enable condition:** • pull the E/D pin to 'H" if the oscillator should always be enabled	

5. FXO111S EMBOSS CARRIER TAPE & REEL

a.) Dimensions of Carrier Tape

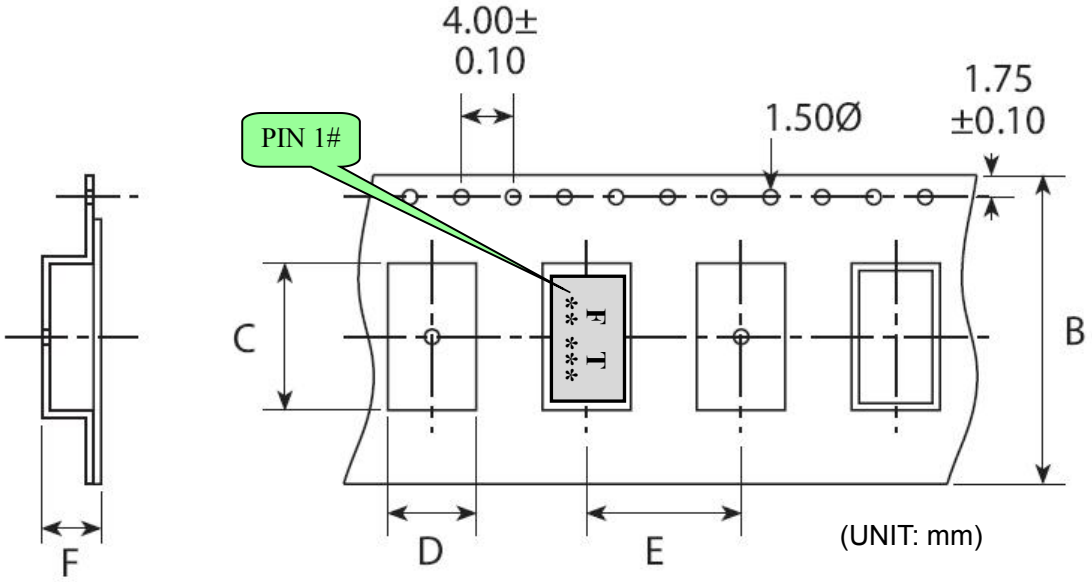

	A	B	C	D	E	F	G
OSC-SMD1612	180±2.0	8.0±0.3	1.85±0.10	1.45±0.10	4.0±0.1	1.0±0.1	60.5±1.0

b.) Dimensions of Reel

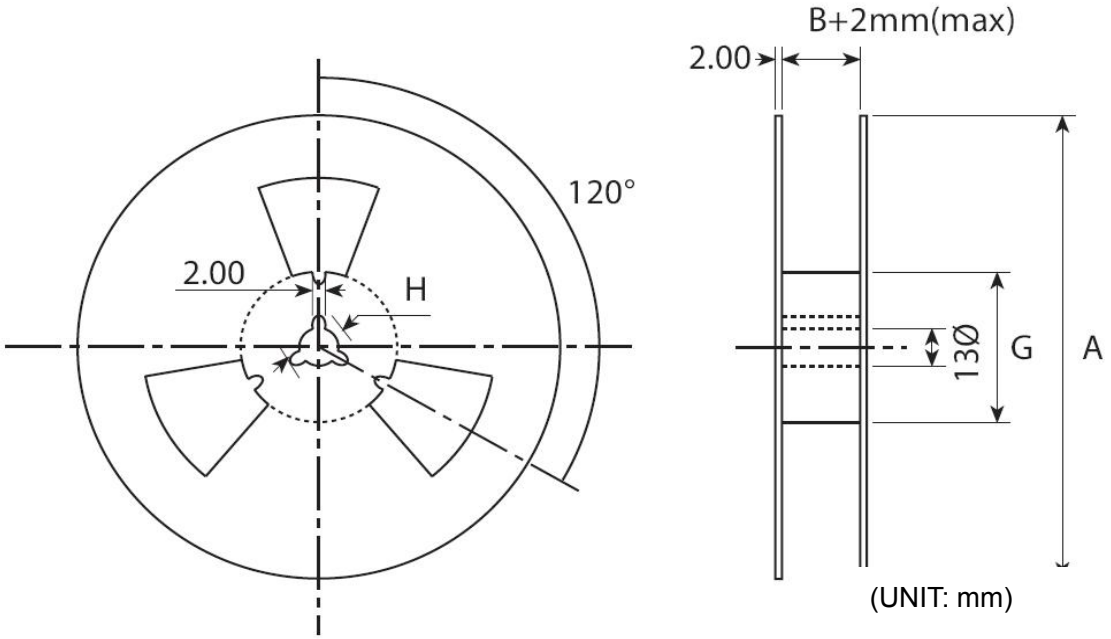

c.) Storage condition

Temperature: +40deg.C Max.

Relative Humidity: 80% Max.

d.) Standard packing quantity

3,000PCS / REEL

e.) Material of the tape

Tape	Material
Carrier tape	A – PET
Top tape	Polyester

f.) Label contents

.The type of product

.Our specification No.

.Your Part No.

.Lot No.

.Nominal Frequency

.Quantity

.Our Company Name

Sticks label for every reel.

PART NUMBER	
Lot. NO:	
HOLDER TYPE	
FREQUENCY	
REMAKS	
QUANTITY	
TIANGXI COMPONENTS CO., LTD.	

g.) Taping method

Taping shall be placed in tapes in such manner as to assure that marking of the components is visible as per Fig.1

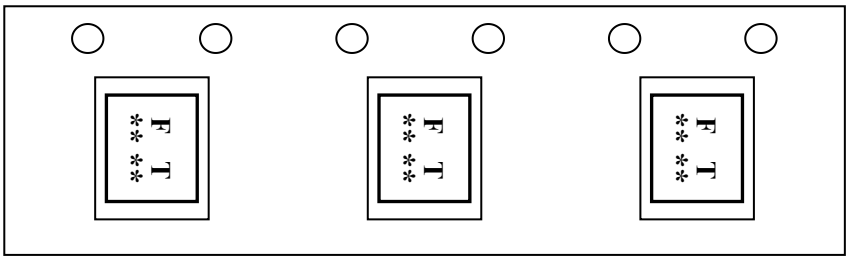

h.) Taping dimension

Leader	Cover-tape	The length of cover-tape in the leader is more than 400 mm including empty embossed area.
	Carrier-tape	After all products were packaged, must remain more than twenty pieces or 400 mm empty area, which should be sealed by cover-tape.
Terminal	Cover-tape	The tip of cover-tape shall be fixed temporary by paper tape and roll around the core of reel one round.
	Carrier-tape	The empty embossed area which are sealed by top cover-tape must remain more the 40 mm.

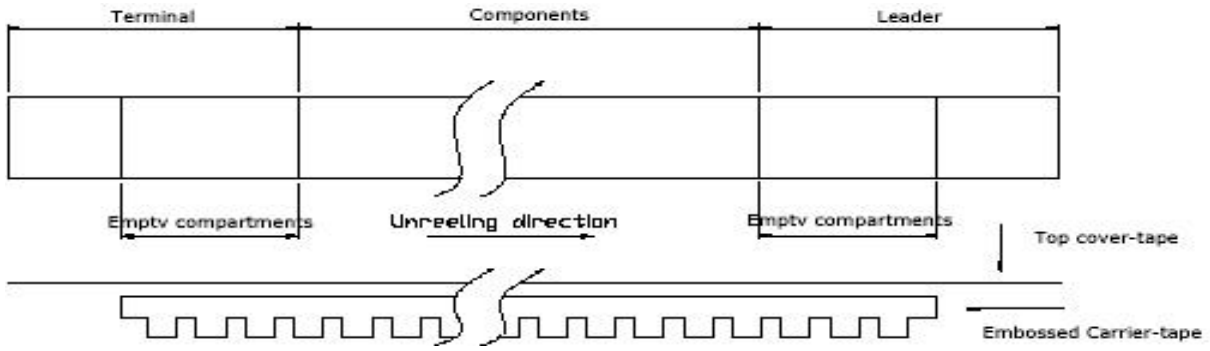

i.) Joint of tape

The carrier-tape and top cover-tape should not be jointed.

j.) Release strength of cover tape

It has to between 0.1N to 0.7N under following condition.

Pulling direction 165° to 180°

Speed 300mm/min.

Otherwise unless specified.

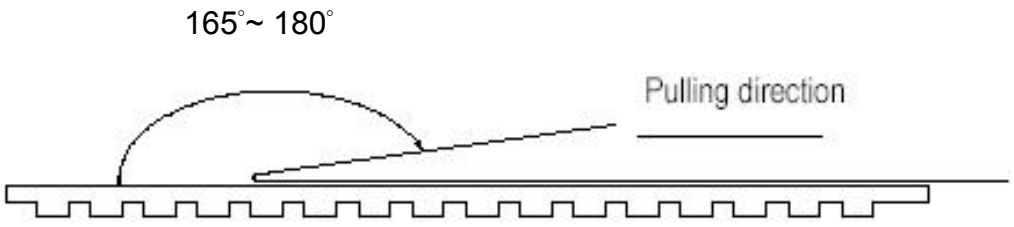

Other standards shall be based on JIS C 0806-1990.

6. Mechanical Endurance: Provided that measurement shall be carried out afterletting it alone in the room temperature for 1 hour.

	Item	Conditions	Specifications
1	Drop	Should be satisfied after dropping three times from the height of 100 cm onto hard wooden board of thickness more than 30mm.	The parameters of table 3 must be satisfied
2	Vibration	Should be satisfied after supplying following (1)Vibration Frequency: 10~55Hz (2)Cycle: 1 to 2 Min. (3)Full Cycle: 0.8mm P-P. (4)Direction: X.Y.Z (5)Time: 2 Hours / Each Direction	The parameters of table 3 must be satisfied
3	Substrate Bending	Mount the specimen on substrate. Apply the following pressure Direction: see Fig –1 Speed: 0.5 mm/sec Hours: 5 ± 1 sec Amount of substrate: 3 mm Max.	The parameters of table 3 must be satisfied
4	Adhesion	Mount the specimen on substrate. Apply the following pressure Direction: see Fig –2 Weight: 10N Hours: 10 ± 1 sec	The parameters of table 3 must be satisfied
5	Body strength	Mount the specimen on substrate. Apply the following pressure Direction: see Fig –3 Weight: 10N Hours: 10 ± 1 sec	The parameters of table 3 must be satisfied

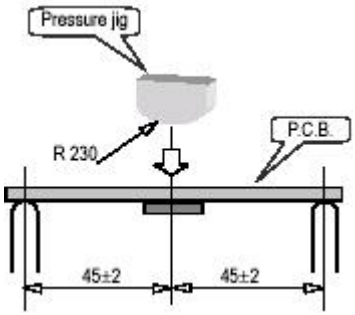

Fig-1

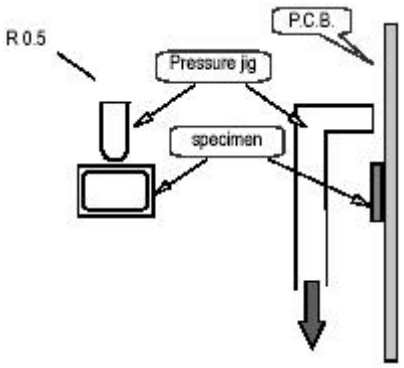

Fig-2

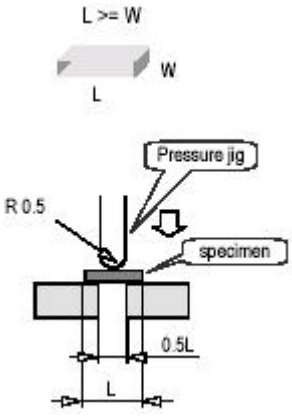

Fig-3

<table>
<tr><td>6</td><td>Seal</td><td colspan="2">Less than 2.0 x 10-9 Pa.m3/sec by Helium leak detector.
Also, no serial bubble is observed by Fluorinate tests.</td></tr>
<tr><td>7</td><td>Solder ability</td><td>3 sec Dip in 235℃±5℃ solder.
(Use ROSIN type flux for solder.)</td><td>More than 90% of lead shall be covered by new solder.</td></tr>
<tr><td>8</td><td>Resistance to Soldering Heat</td><td>Run in Reflow
Reflow soldering shall be allowed
Only two(2) time.

Available for Lead Free Soldering
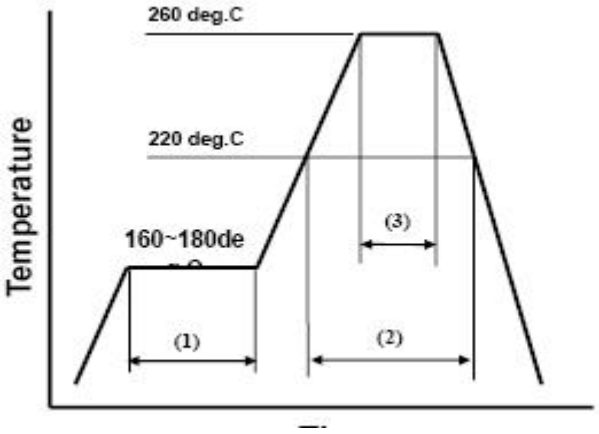

<table>
<tr><td>(1)</td><td>Preheat</td><td>160~180 deg.C</td><td>120sec.</td></tr>
<tr><td>(2)</td><td>Primary heat</td><td>220 deg.C</td><td>60sec.</td></tr>
<tr><td>(3)</td><td>Peak</td><td>260 deg.C</td><td>10sec. Max.</td></tr>
</table></td><td>The parameters of table 3 must be satisfied</td></tr>
</table>

7. Environmental Endurance: Provided that measurement shall be carried out afterletting it alone in the room temperature for 1 hour.

	Item	Conditions	Specifications
1	Humidity	Should be satisfied after letting it alone at +60℃±2℃ in humidity of 90%～95% for 500 hours.	The parameters of table 1 must be satisfied. No physical damage.
2	Storage in Low Temperature	Should be satisfied after letting it alone at -40℃±2℃ for 500 hours.	The parameters of table 1 must be satisfied. No physical damage.
3	Storage in High Temperature	Should be satisfied after letting it alone at +85℃±2℃ for 500 hours.	The parameters of table 1 must be satisfied. No physical damage.
4	Temperature Cycle	Should be satisfied after supplying the following temperature cycle (100 cycles). (Refer to Fig-4). Temperature shift from low to high, high to low shall be done in 1℃/min.	The parameters of table 1 must be satisfied. No physical damage.

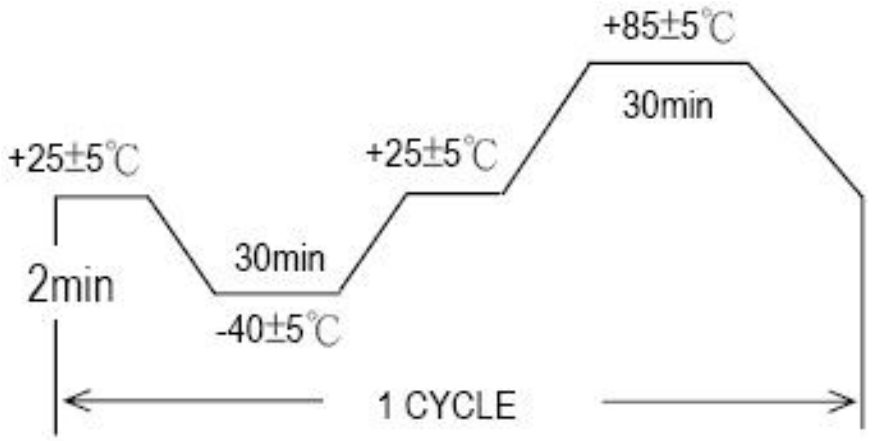

Fig-4

8. **STRUCTURE ILLUSTRATION**

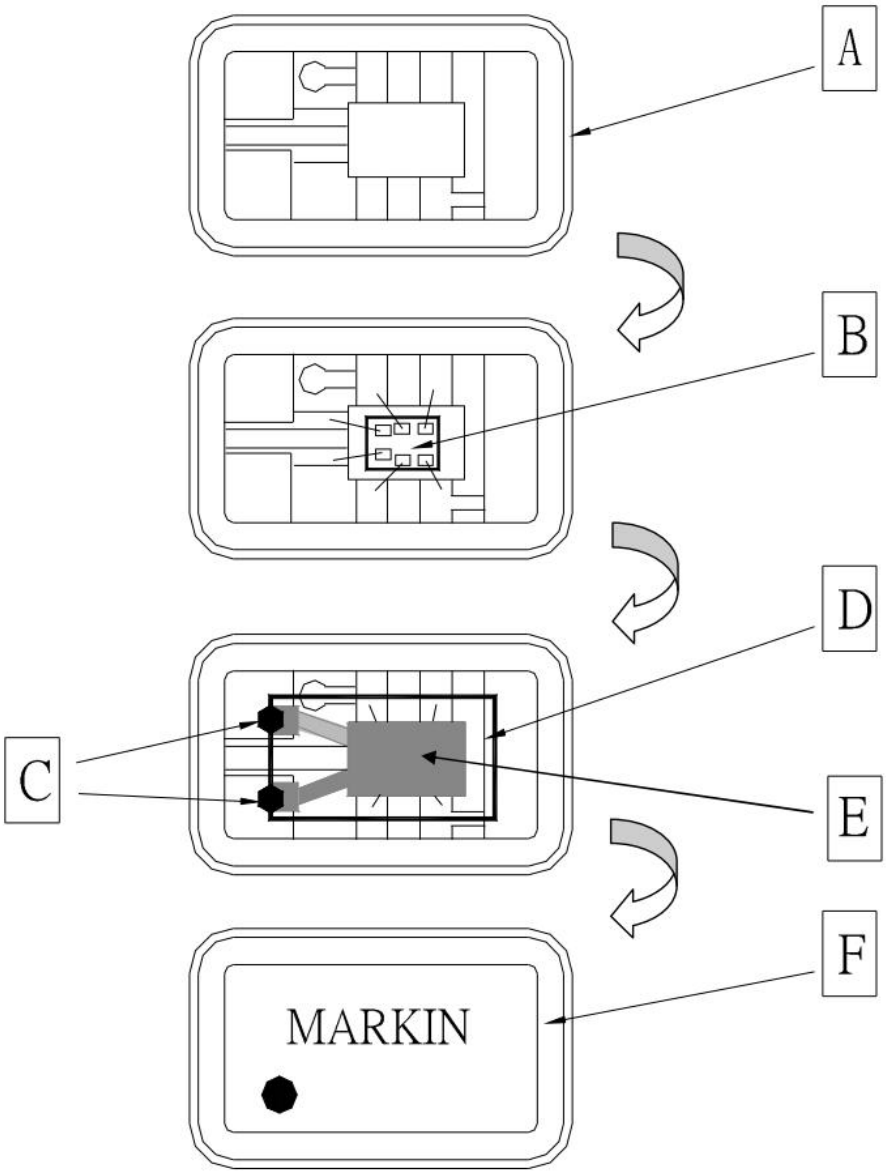

COMPONENTS		METERIALS	COMPONENTS		METERIALS
A	Base (Package)	Ceramic(Al_2O_3) + Kovar(Fe+Co+Ni)	D	Crystal blank	SiO_2
B	IC Chip	Si	E	Electrode	Cr+Ag
C	Conductive adhesive	Ag+Silicon resin	F	Lid	Kovar(Fe+Co+Ni)

9. The production technical :

Reflow Condition：

