Infrared CO2 Sensor

(Model：MH-Z1911A)

User's Manual

Version：1.0

Valid From：2023-01-04

Zhengzhou Winsen Electronic Technology Co., Ltd

Statement

This manual copyright belongs to Zhengzhou Winsen Electronics Technology Co., LTD. Without the written permission, any part of this manual shall not be copied, translated, stored in database or retrieval system, also can't spread through electronic, copying, record ways.

Thanks for purchasing our product. In order to let customers use it better and reduce the faults caused by misuse, please read the manual carefully and operate it correctly in accordance with the instructions. If users disobey the terms or remove, disassemble, change the components inside of the sensor, we shall not be responsible for the loss.

The specific such as color, appearance, sizes &etc, please in kind prevail.

We are devoting ourselves to products development and technical innovation, so we reserve the right to improve the products without notice. Please confirm it is the valid version before using this manual. At the same time, users' comments on optimized using way are welcome.

Please keep the manual properly, in order to get help if you have questions during the usage in the future.

Zhengzhou Winsen Electronics Technology CO., LTD

MH-Z1911A Infrared CO2 Sensor

Profile

MH-Z1911A infrared CO2 sensor is intelligent sensor as shown in Figure 1,common type, small size, using non-dispersive infrared (NDIR) principle to detect the existence of CO2 in the air, with good selectivity, non-oxygen dependent and long life. Built-in temperature compensation, and it has UART output and PWM output. It is developed by the tight integration of mature infrared absorbing gas detection technology, precision optical circuit design and superior circuit design.

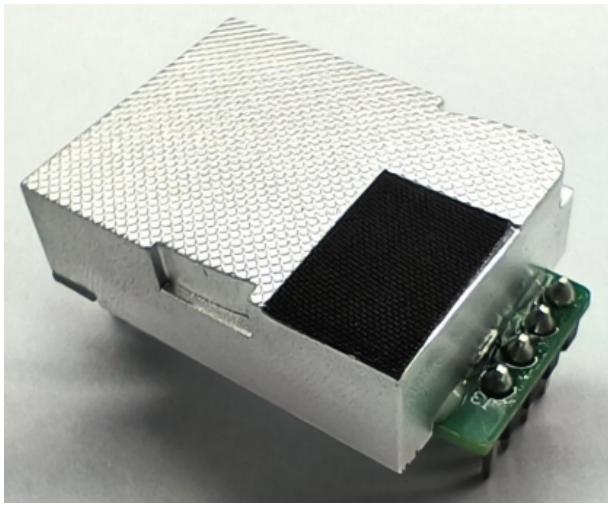

Figure 1

Features:

*High sensitivity, low power consumption
*Good stability and consistency
*Temperature compensation, excellent linear output
*Multiple output modes: UART, PWM
*Long lifespan
*Anti-water vapor interference, anti-poisoning

Applications:

*HVAC system
*Indoor air quality monitor
*Consumer CO2 meter
*Air purifier
*Smart home device

Main parameters:

Model No.	MH-Z1911A	Preheat time	1 min
Detection Gas	CO2	Response Time	T_{90} < 120 s
Working voltage	DC 5.0±0.1V	Working temperature	-10 ~ 50 ℃
Average current	< 30mA (@5V power supply)	Working humidity	0~95%RH(No condensation)
Peak current	125mA (@5V power supply)	Storage temperature	-20~60 ℃
Interface level	3.3 V (Compatible with 5V)	Weight	5 g
Output signal	Serial Port (UART) (TTL level 3.3V)	Detection Range	400~10000ppm(optional,see table2.)
	PWM	Lifespan	> 10 years

Table1

Detection Gas	Formula	Detection Range	Resolution	Accuracy
Carbon Dioxide	CO2	400~2000ppm	1ppm	± (50ppm+5% reading value)
		400~5000ppm		
		400-10000ppm		

Table2 Detection range and accuracy

Appearance and structure:

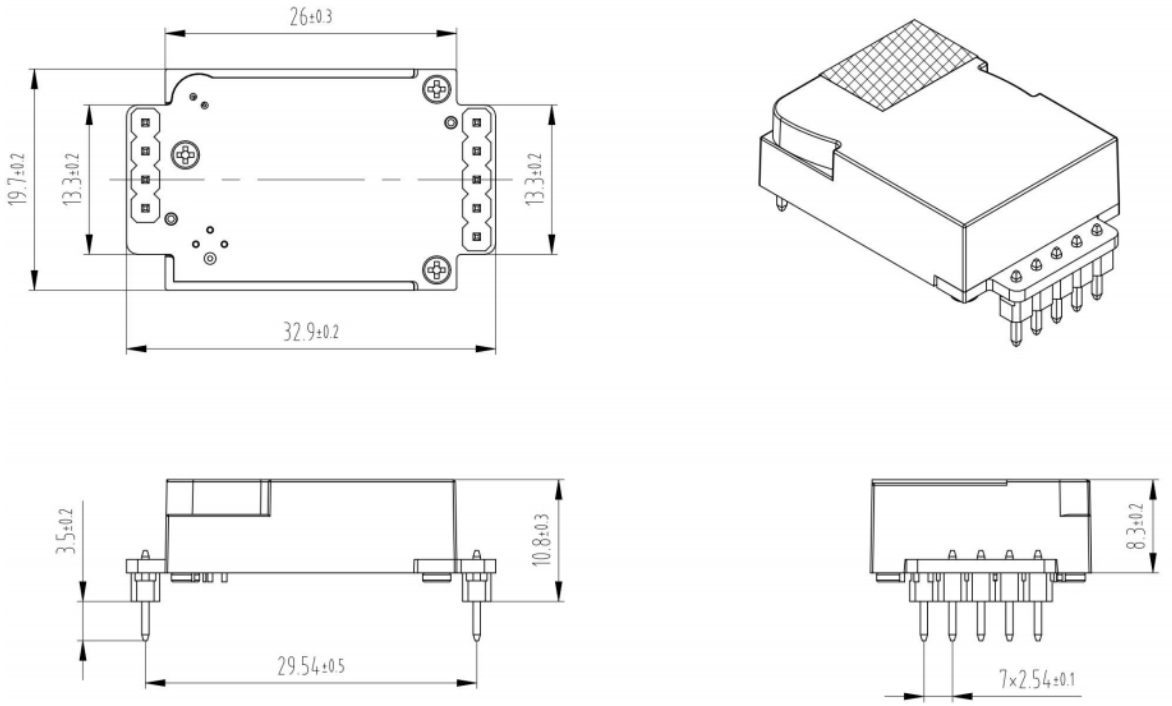

Figure 2

Pin Definition:

Pin	Pin Definition
Vin	Positive pole of power (Vin)
GND	Negative pole of power (GND)
PWM	PWM
Hd	HD(0 point calibration, low level lasting for over 7s is effective)
Rx	UART(RXD)TTL Level data input
Tx	UART(TXD)TTL Level data output

Table 3

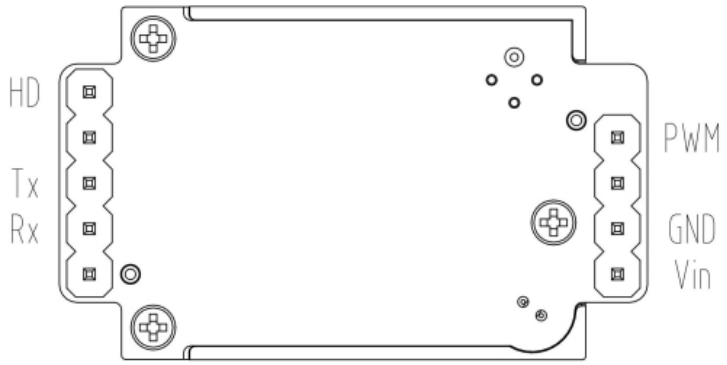

Figure 3 Pin Diagram

Cautions:

1. Please avoid the pressure of its optical chamber from any direction, during welding, installation, and use.
2. When placed in small space, the space should be well ventilated, especially for diffusion window.
3. The module should be away from heat, and avoid direct sunlight or other heat radiation.
4. The module should be calibrated termly, the suggested period is no longer than 6 months.
5. Do not use the sensor in the high dusty environment for long time.
6. To ensure the normal work, the power supply must be among 5.0V±0.1V DC rang, the power current must be not less than 150mA. Out of this range, it will result in the failure of the sensor. (The concentration output is low, or the sensor cannot work normally.)
7. During the zero-point calibration procedure by manual or sending command, the sensor must work in stable gas environment (400ppm) for over 20 minutes.
8. Forbid using wave soldering for the sensor.
9. When soldering with soldering iron, set the temperature to be (350±5)℃, and soldering time must be within 3 seconds.
10. We suggest customers to use the way of soldering the socket and plugging/pulling the sensors for easier maintenance.

Zhengzhou Winsen Electronics Technology Co., Ltd
Add: No.299, Jinsuo Road, National Hi-Tech Zone, Zhengzhou 450001 China
Tel: +86-371-67169097/67169670
Fax: +86-371-60932988
E-mail: sales@winsensor.com
Website: www.winsen-sensor.com