Hydrogen Chloride Gas Sensor

**（Model：ME4-HCL）**

# Manual

Version: 1.2

Valid from: 2014-05-01

Zhengzhou Winsen Electronics Technology Co., Ltd

# Statement

This manual copyright belongs Zhengzhou Winsen Electronics Technology Co., LTD. Without the written permission, any part of this manual shall not be copied, translated, stored in database or retrieval system, also can't spread through electronic, copying, record ways.

Thanks for purchasing our product. In order to let customers use it better and reduce the faults caused by misuse, please read the manual carefully and operate it correctly in accordance with the instructions. If users disobey the terms or remove, disassemble, change the components inside of the sensor, we shall not be responsible for the loss.

The specific such as color, appearance, sizes &etc, please in kind prevail.

We are devoting ourselves to products development and technical innovation, so we reserve the right to improve the products without notice. Please confirm it is the valid version before using this manual. At the same time, users' comments on optimized using way are welcome.

Please keep the manual properly, in order to get help if you have questions during the usage in the future.

Zhengzhou Winsen Electronics Technology CO., LTD

# ME4-HCL Hydrogen Chloride Gas Sensor

## Profile

ME4-HCL hydrogen chloride gas sensor is constant potential electrolysis type. Oxidation-reduction reaction with hydrogen chloride and oxygen take place respectively on the working electrode and on the counter electrode. The process releases electric charge and generates current. The current is in direct proportion to the concentration of hydrogen sulfide. So the concentration of the target gas could be got by measuring the value of current.




## Features

Low power consumption, high precision, high sensitivity, wide linear range, good anti-interference ability, excellent repeatability and stability.

## Main applications

It is used for hydrogen chloride detection in industrial occasions, mine and environmental protection field.

## Technical Parameters Stable1.

| | |
|---|---|
| Detection Gas | Hydrogen chloride (HCL) |
| Detection Range | 0～20ppm |
| Max range | 200ppm |
| Sensitivity | （0.4～0.8）μA/ppm |
| Resolution | 0.1ppm |
| Response Time($T_{90}$) | ＜30S |
| Bias Voltage | 0mV |
| Load Resistance | 10Ω(recommended) |
| Repeatability | ＜2％Output value |
| Stability(/month) | ＜2％ |
| Output Linearity | Linear |
| Zero drift(-20℃～40℃) | ≤0.2ppm |
| Temperature range | -20℃～50℃ |
| Humidity range | 15％～90％RH |
| Pressure range | standard atmospheric pressure±10％ |
| Lifespan | 2years(in air) |

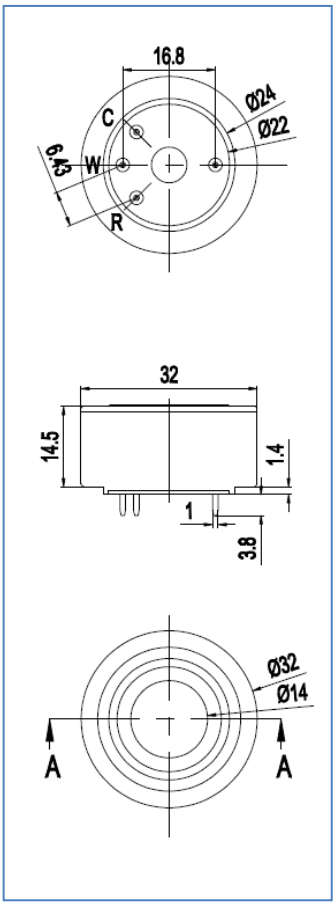


**Fig1.Sensor Structure**

## Basic Circuit

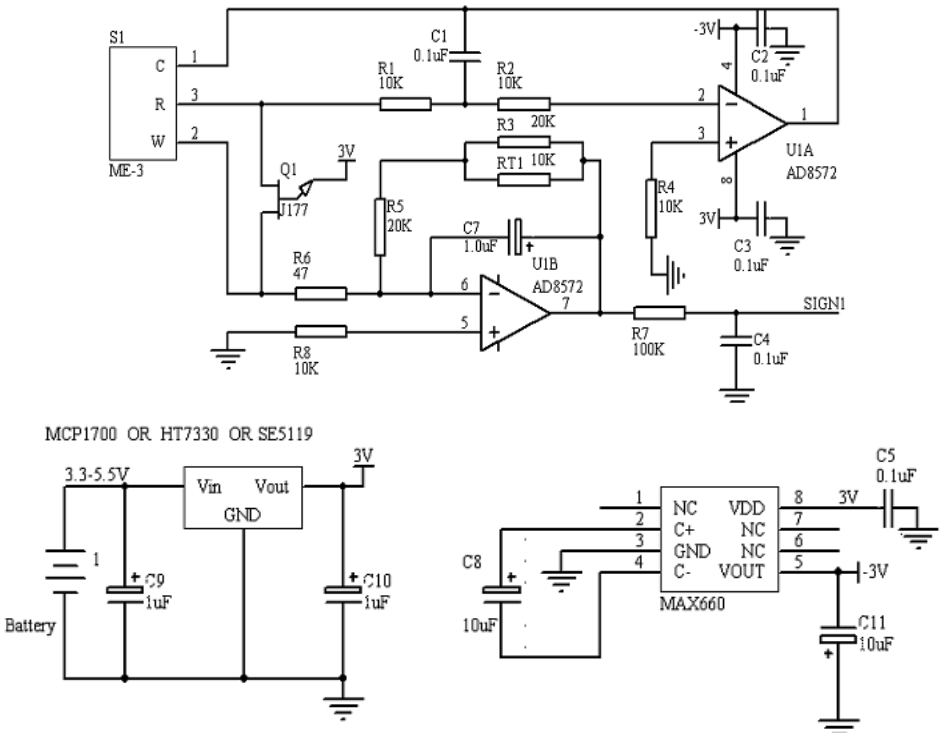


**Fig2: ME4-HCL test circuit**

### Description of sensor characters

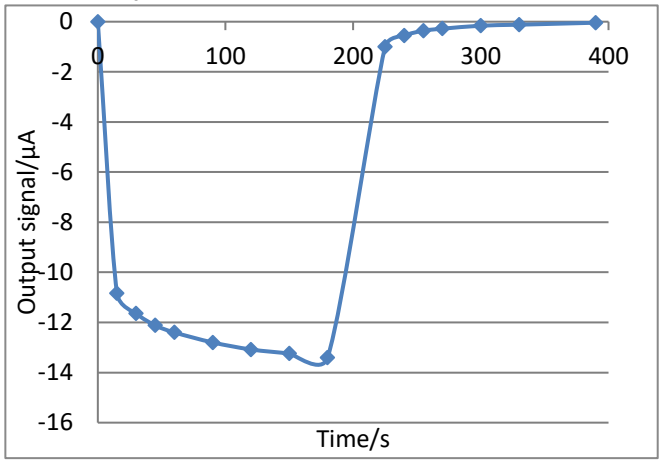


**Fig3.Responce and Resume**

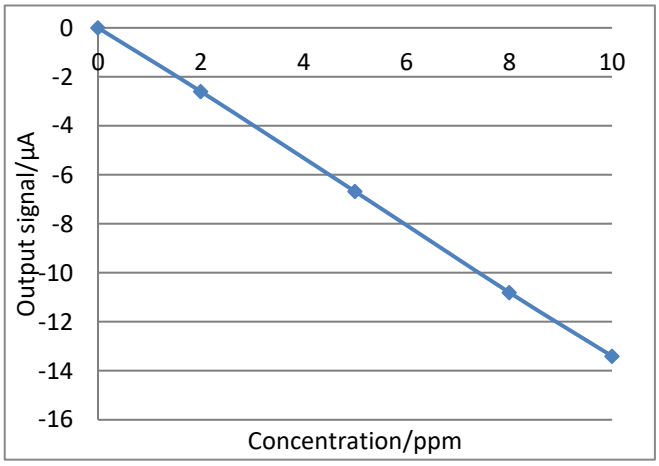


**Fig4.Linearity**

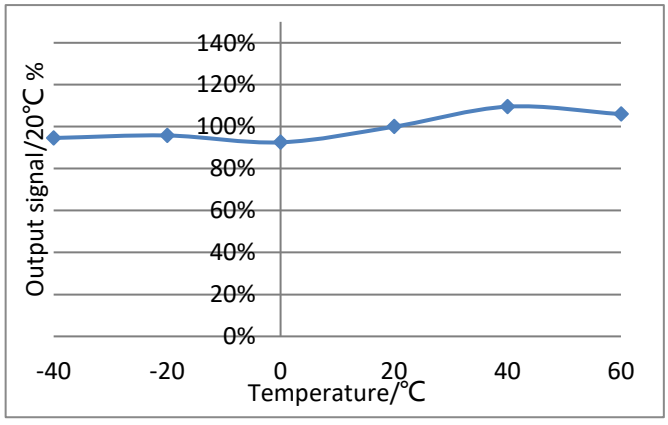


**Fig5.Output of sensor at different temperature**

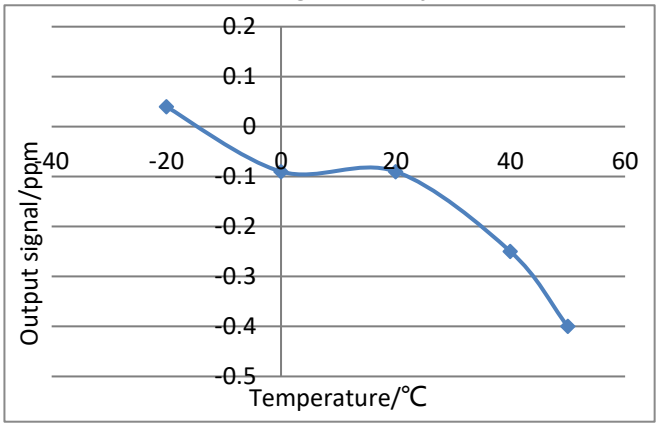


**Fig6.Zero output of sensor at different temperature**

**Cross Interference**

ME4-HCL sensor also can respond to other gases besides target gas HCL. Following data are the response characteristics of the sensor to interferential gases at certain concentration for your reference.

**Table2. Cross interference**

| Interference gas | Concentration | ME4-HCL |
|---|---|---|
| CO | 200ppm | ＜2 ppm |
| NO2 | 5ppm | ≈-5ppm |
| CL2 | 10 ppm | ＜-10 ppm |
| $CH_4$ | 400 ppm | 0 ppm |
| NO | 35 ppm | 0 ppm |
| H2 | 500 ppm | ＜2 ppm |
| HCN | 10 ppm | ＜0.2 ppm |
| C2H4 | 100 ppm | ＜6 ppm |
| H2S | 15 ppm | 29 ppm |

**Cautions!**

- Tin soldering is prohibited.
- Before using, power on to aging for more than 48 hours is necessary.
- Pins can't be broke off or bent.
- Don't disassemble the sensor to avoid the damage caused by electrolyte leakage.
- Avoid contacting organic solvent (including Silicone rubber and other adhesive), coatings, medicine, oil and high concentration gases.
- All the electrochemical sensors shall not be encapsulated completely by resin materials, and shall not immerse in pure oxygen environment, otherwise, it will damage the function of sensor
- All electrochemical sensors shall not be applied in corrosive gas environment, or the sensor will be damaged
- Zero calibration should be finished in clean air.
- During test and usage, sensors should avoid the gas inflow vertically
- The side for inflow can't be choked and polluted.
- The laminating film above the sensor surface can't be uncovered and damage.
- Excessive impact or vibration should be avoided
- It takes some time for the sensor to return to normal state after it is applied in high

concentration gas

- Working electrode and reference electrode of the sensor shall be in short circuit when stored
- Prohibit to use the hot cement or sealant of which the curing temperature is higher than80℃ to make the capsulation for the sensor.
- Prohibit storage and usage for long time in alkaline gases with high concentration.
- Do not use the sensor when the shell is damaged

**Zhengzhou Winsen Electronics Technology Co., Ltd**
**Add.:** NO.299 Jin Suo Road, National Hi-Tech Zone, Zhengzhou, 450001 China
**Tel.:** 0086-371-67169097 67169670
**Fax**:0371-60932988
**E-mail:**sales@winsensor.com