Air Quality Gas Sensor

（Model：MQ135B）

Manual

Version: 1.6

Valid from: 2021-07-01

Zhengzhou Winsen Electronics Technology Co., Ltd

Statement

This manual copyright belongs to Zhengzhou Winsen Electronics Technology Co., LTD. Without the written permission, any part of this manual shall not be copied, translated, stored in database or retrieval system, also can't spread through electronic, copying, record ways.

Thanks for purchasing our product. In order to let customers use it better and reduce the faults caused by misuse, please read the manual carefully and operate it correctly in accordance with the instructions. If users disobey the terms or remove, disassemble, change the components inside of the sensor, we shall not be responsible for the loss.

The specific such as color, appearance, sizes &etc, please in kind prevail.

We are devoting ourselves to products development and technical innovation, so we reserve the right to improve the products without notice. Please confirm it is the valid version before using this manual. At the same time, users' comments on optimized using way are welcome.

Please keep the manual properly, in order to get help if you have questions during the usage in the future.

Zhengzhou Winsen Electronics Technology CO., LTD

MQ135B Semiconductor Sensor for Air Quality

Profile

Sensitive material of MQ135B gas sensor is SnO_2, which with lower conductivity in clean air. When target pollution gas exists, the sensor's conductivity gets higher along with the gas concentration rising. Users can convert the change of conductivity to correspond output signal of gas concentration through a simple circuit.
MQ135B gas sensor has high sensitivity to ammonia gas, sulfide, benzene series steam, also can monitor smoke and other toxic gases well. It can detect kinds of toxic gases and is a kind of low-cost sensor for kinds of applications.



Features

It has good sensitivity to toxic gas in wide range, and has advantages such as long lifespan, low cost and simple drive circuit &etc.

Main Applications

It is widely used in domestic gas alarm, industrial gas alarm and portable gas detector.

Technical Parameters Stable.1

Model			MQ135B
Sensor Type			Semiconductor
Standard Encapsulation			Plastic cap
Target Gas			ammonia gas, sulfide, benzene series steam
Detection range			10～1000ppm(ammonia gas, toluene, hydrogen, smoke)
Standard Circuit Conditions	Loop Voltage	V_c	5.0V±0.1V DC
	Heater Voltage	V_H	5.0V±0.1V AC or DC
	Load Resistance	R_L	Adjustable
Sensor character under standard test conditions	Heater Resistance	R_H	30Ω±3Ω (room temp.)
	Heater consumption	P_H	≤950mW
	Sensitivity	S	Rs(in air)/Rs(in 400ppm H_2)≥5
	Output Voltage	Vs	2.0V～4.0V（in 400ppm H_2）
	Concentration Slope	α	≤0.6(R_{400ppm}/R_{100ppm} H_2)
Standard test conditions	Tem. Humidity		20℃±2℃；55%±5%RH
	Standard test circuit		Vc:5.0V±0.1V； V_H: 5.0V±0.1V
	Preheat time		Over 48 hours
Oxygen content			21% (not less than 18%)
Lifespan			10 years

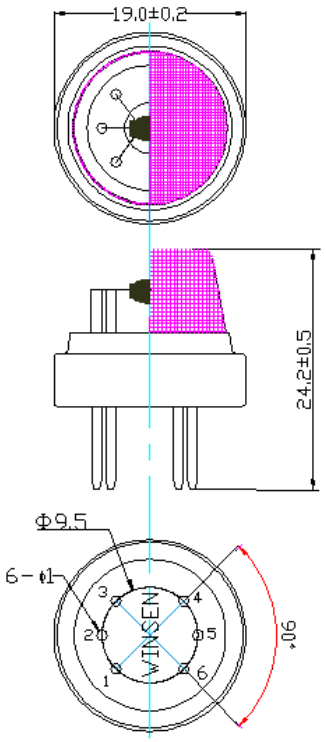

Fig1.Sensor Structure

Unit: mm

NOTE: Output voltage (Vs) is V_{RL} in test environment. The oxygen concentration will affect the initial value, sensitivity and repeatability of the sensor.

Basic Circuit

Fig2. MQ135B Test Circuit

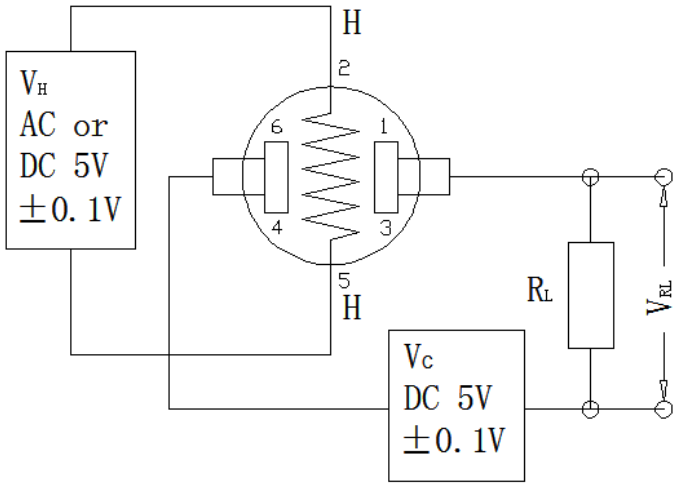

Instructions: The above fig is the basic test circuit of MQ135B.The sensor requires two voltage inputs: heater voltage (V_H) and circuit voltage(V_C). V_H is used to supply standard working temperature to the sensor and it can adopt DC or AC power, while V_{RL} is the voltage of load resistance R_L which is in series with sensor. Vc supplies the detect voltage to load resistance R_L and it should adopt DC power.

Calculation formula: Resistance of Sensitive materials (Rs)=(Vc/VRL-1)×RL

Power consumption of Sensitive materials (Ps)=Vc2×Rs/(Rs+RL)^2

Description of Sensor Characters

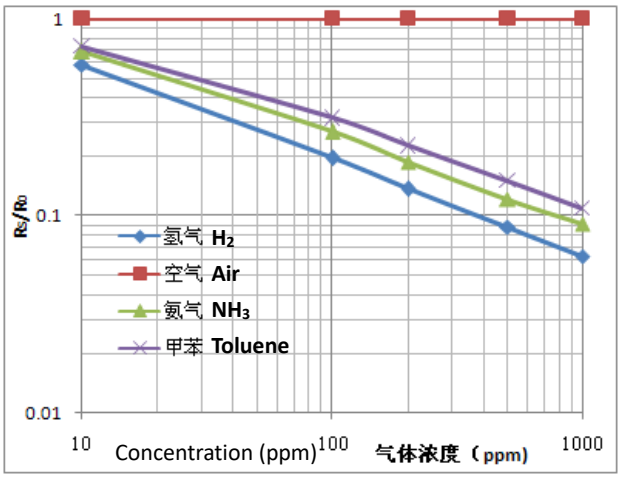

Fig3.Typical Sensitivity Curve

The ordinate is resistance ratio of the sensor (Rs/R_0), the abscissa is concentration of gases. Rs means resistance in target gas with different concentration, R_0 means resistance of sensor in clean air. All tests are finished under standard test conditions.

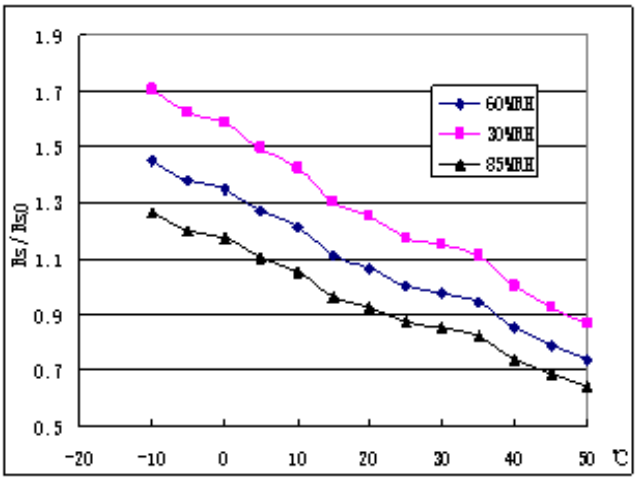

Fig4.Typical temperature/humidity characteristics

The ordinate is resistance ratio of the sensor (Rs/Rso).Rs means resistance of sensor in 400ppm H_2 gas under different tem. and humidity. Rso means resistance of the sensor in 400ppm H_2 gas under 20℃/55%RH.

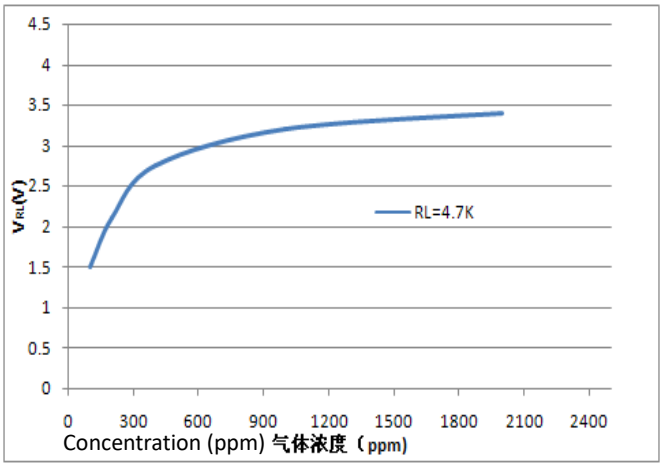

Fig5.Sensitity Curve

Fig5 shows the V_{RL} in H2 gas with different concentration. The resistance load R_L is 4.7 KΩ and the test is finished in standard test conditions.

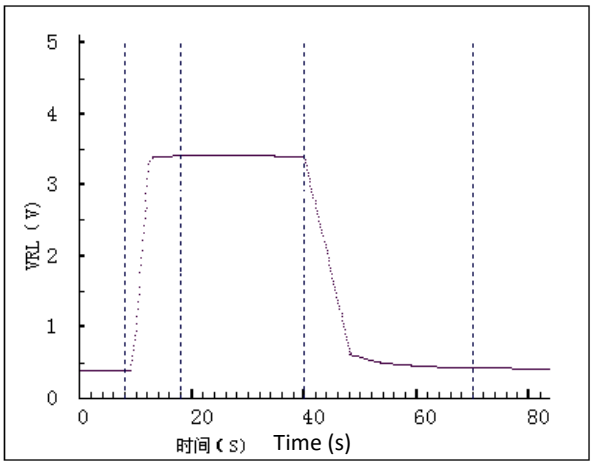

Fig6.Responce and Resume

Fig5 shows the changing of V_{RL} in the process of putting the sensor into target gas and removing it out.

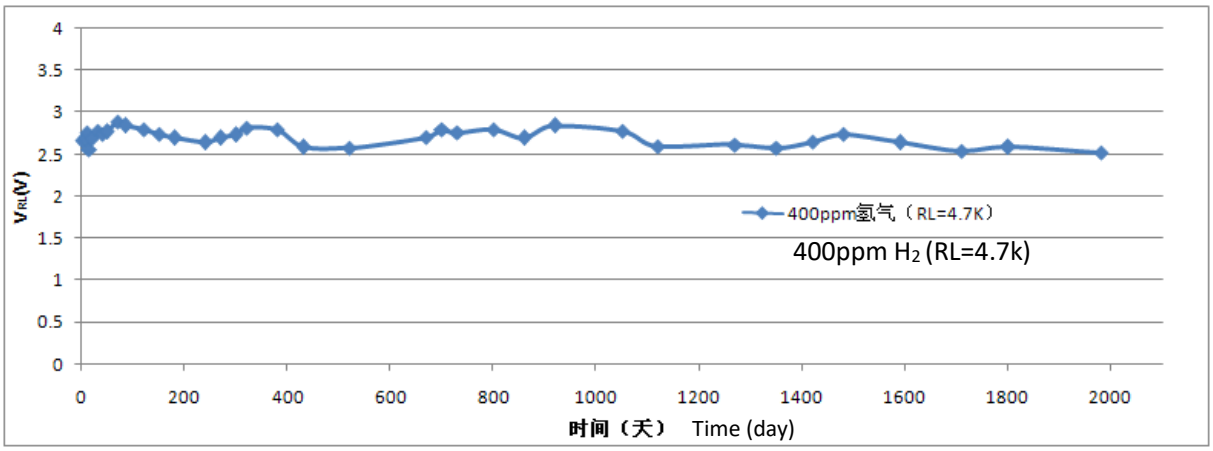

Fig7.long-term Stability

Test is finished in standard test conditions, the abscissa is observing time and the ordinate is V_{RL}.

Cautions

1 .Following conditions must be prohibited

1.1 Exposed to organic silicon steam

Sensing material will lose sensitivity and never recover if the sensor absorbs organic silicon steam. Sensors must avoid exposing to silicon bond, fixature, silicon latex, putty or plastic contain silicon environment.

1.2 High Corrosive gas

If the sensors are exposed to high concentration corrosive gas (such as H_2S, SO_X, Cl_2, HCl etc.), it will not only result in corrosion of sensors structure, also it cause sincere sensitivity attenuation.

1.3 Alkali, Alkali metals salt, halogen pollution

The sensors performance will be changed badly if sensors be sprayed polluted by alkali metals salt especially brine, or be exposed to halogen such as fluorine.

1.4 Touch water

Sensitivity of the sensors will be reduced when spattered or dipped in water.

1.5 Freezing

Do avoid icing on sensor's surface, otherwise sensing material will be broken and lost sensitivity.

1.6 Applied higher voltage

Applied voltage on sensor should not be higher than stipulated value, even if the sensor is not physically damaged or broken, it causes down-line or heater damaged, and bring on sensors' sensitivity characteristic changed badly.

1.7 Voltage on wrong pins

For 6 pins sensor, Pin 2&5 is heating electrodes, Pin (1,3)/(4,6) are testing electrodes (Pin 1 connects with Pin 3, while Pin 4 connects with Pin 6).If apply voltage on Pin 1&3 or 4&6, it will make lead broken; and no signal putout if apply on pins 2&4.

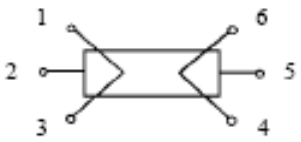

Fig8. Lead sketch

2 .Following conditions must be avoided

2.1 Water Condensation

Indoor conditions, slight water condensation will influence sensors' performance lightly. However, if water condensation on sensors surface and keep a certain period, sensors' sensitive will be decreased.

2.2 Used in high gas concentration

No matter the sensor is electrified or not, if it is placed in high gas concentration for long time, sensors characteristic will be affected. If lighter gas sprays the sensor, it will cause extremely damage.

2.3 Long time storage

The sensors resistance will drift reversibly if it's stored for long time without electrify, this drift is related with storage conditions. Sensors should be stored in airproof bag without volatile silicon compound. For the sensors with long time storage but no electrify, they need long galvanical aging time for stability before using. The suggested aging time as follow:

Stable2.

Storage Time	Suggested aging time
Less than one month	No less than 48 hours
1 ~ 6 months	No less than 72 hours
More than six months	No less than 168 hours

2.4 Long time exposed to adverse environment

No matter the sensors electrified or not, if exposed to adverse environment for long time, such as high humidity, high temperature, or high pollution etc., it will influence the sensors' performance badly.

2.5 Vibration

Continual vibration will result in sensors down-lead response then break. In transportation or assembling line, pneumatic screwdriver/ultrasonic welding machine can lead this vibration.

2.6 Concussion

If sensors meet strong concussion, it may lead its lead wire disconnected.

2.7 Usage Conditions

2.7.1For sensor, handmade welding is optimal way. The welding conditions as follow:

- Soldering flux: Lead-free and halogen-free soldering flux
- homothermal soldering iron
- Temperature： ≤350℃
- Time：less than 3 seconds

If disobey the above using terms, sensors sensitivity will reduce.

Zhengzhou Winsen Electronics Technology Co., Ltd
Add: No.299, Jinsuo Road, National Hi-Tech Zone, Zhengzhou 450001 China
Tel: +86-371-67169097/67169670
Fax: +86-371-60932988
E-mail: sales@winsensor.com
Website: www.winsen-sensor.com