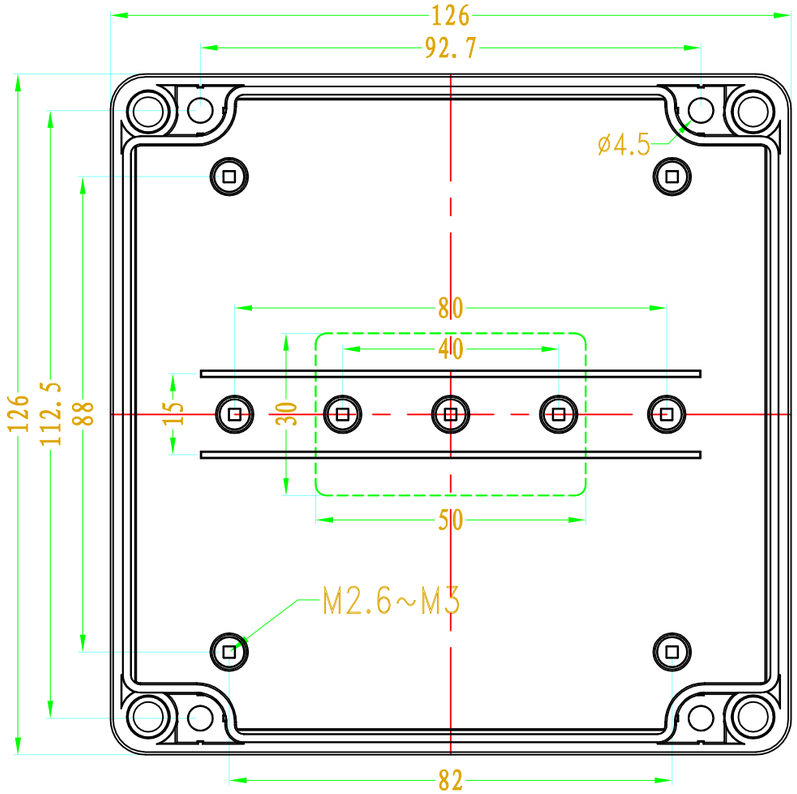

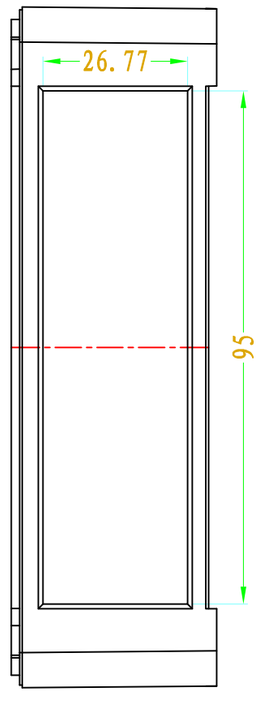

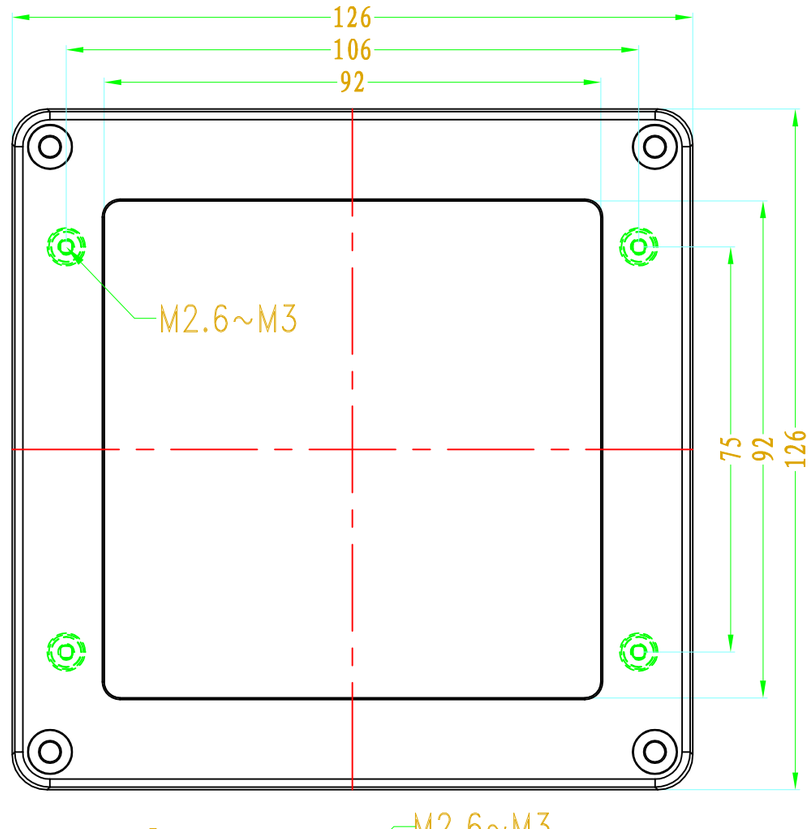

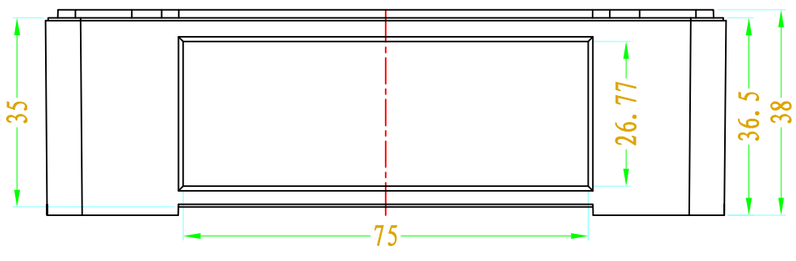

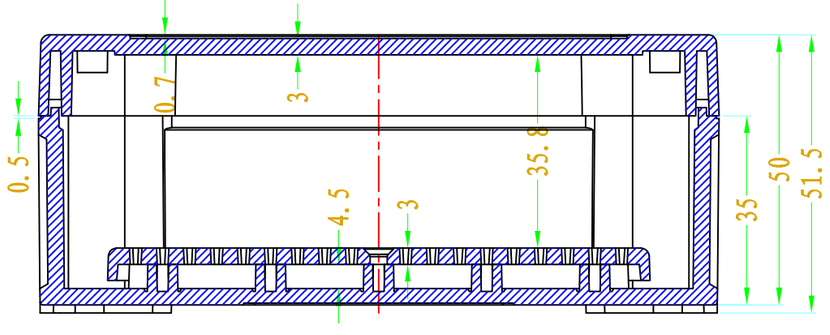

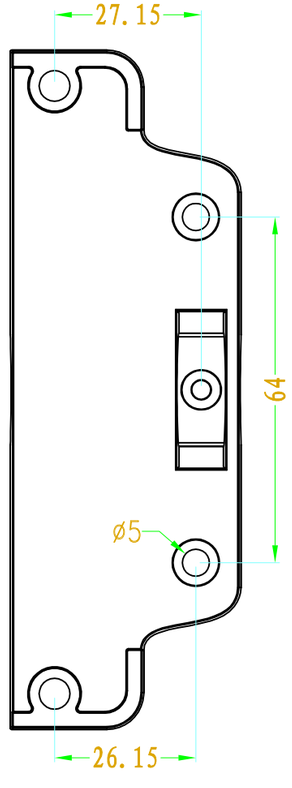

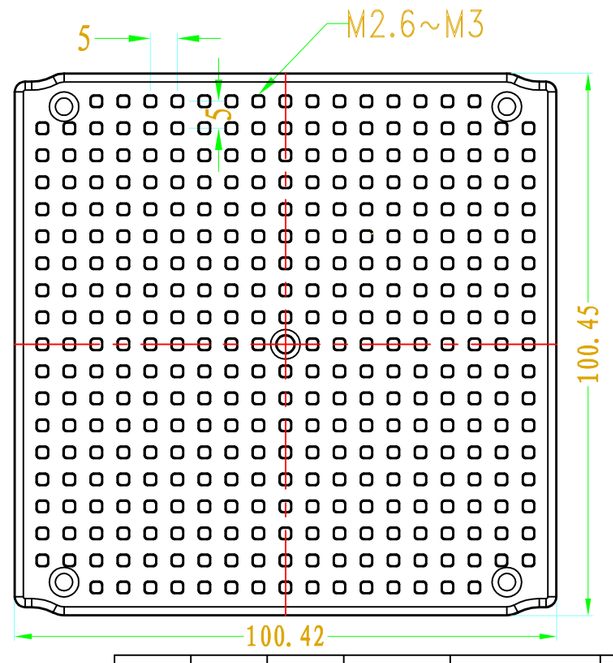

Drawing	Auditing	Confirm	Product Name	Water proof Enclosure	Project View	A
			Product Type	BWP 10208	Drawing Scale	1:1 (MM)

BAHAR ENCLOSURE