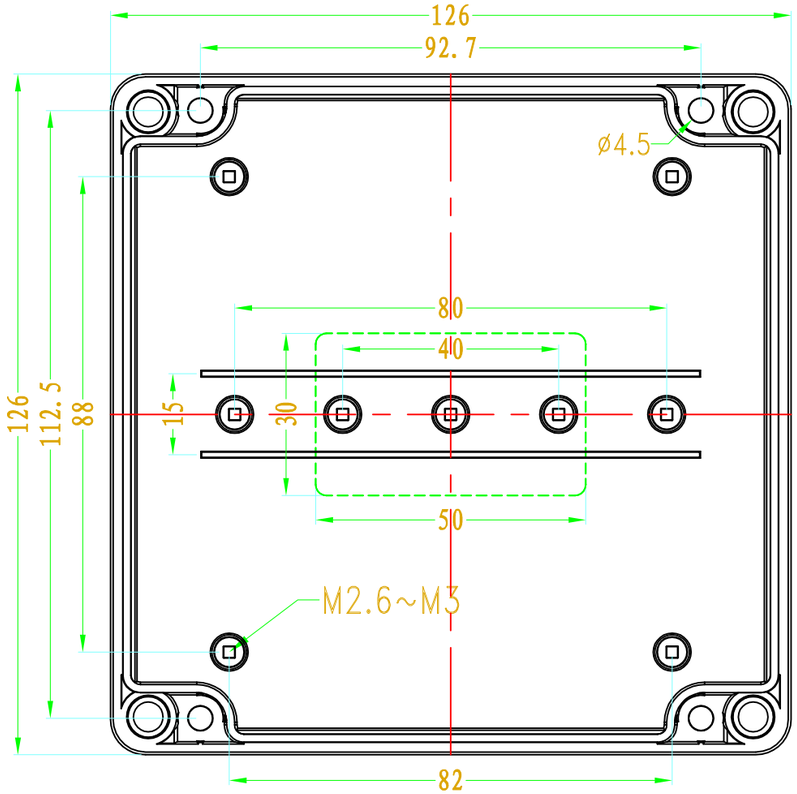

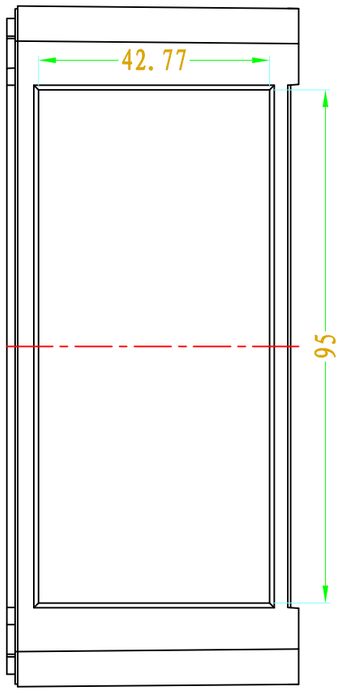

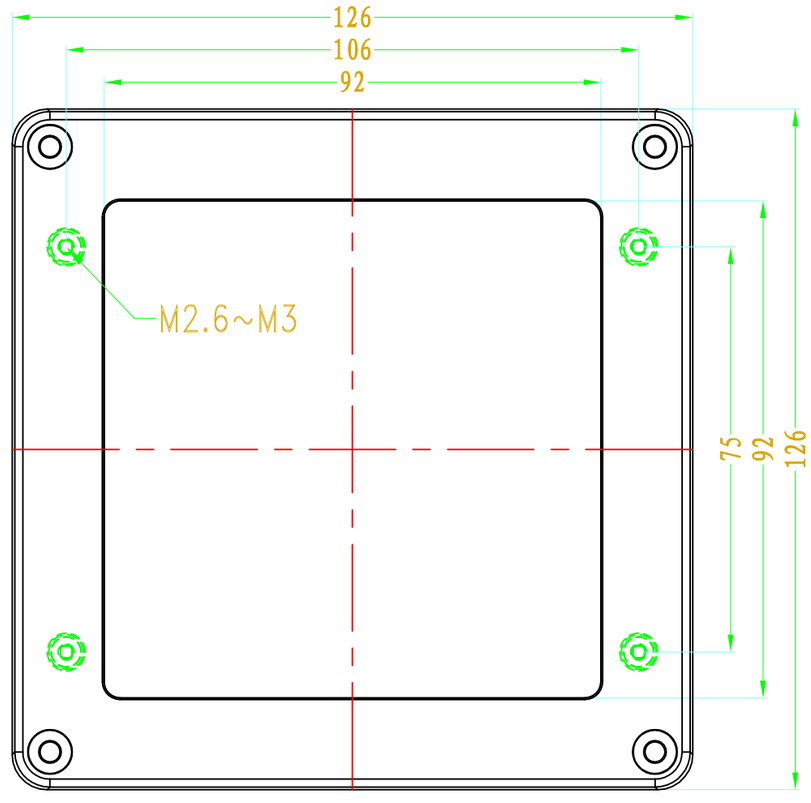

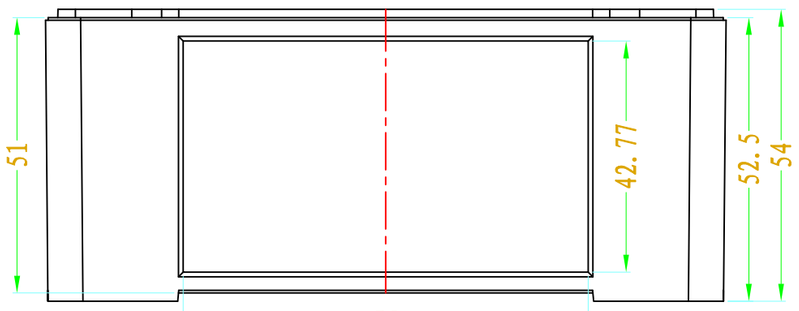

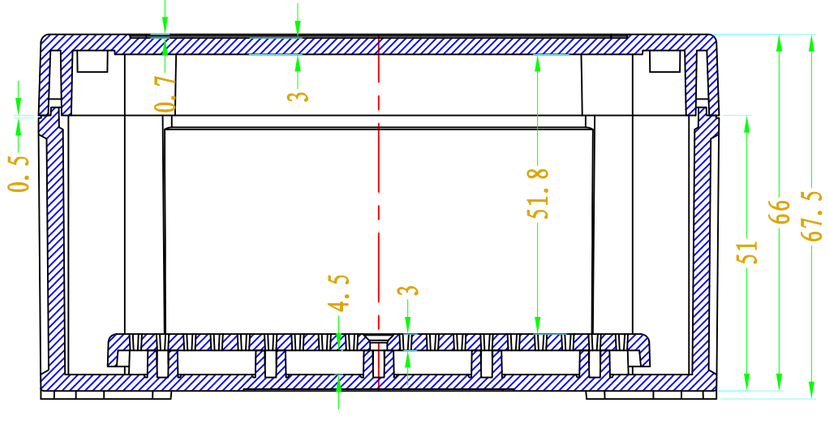

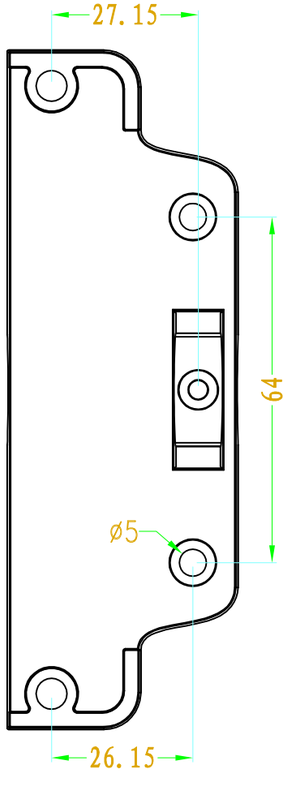

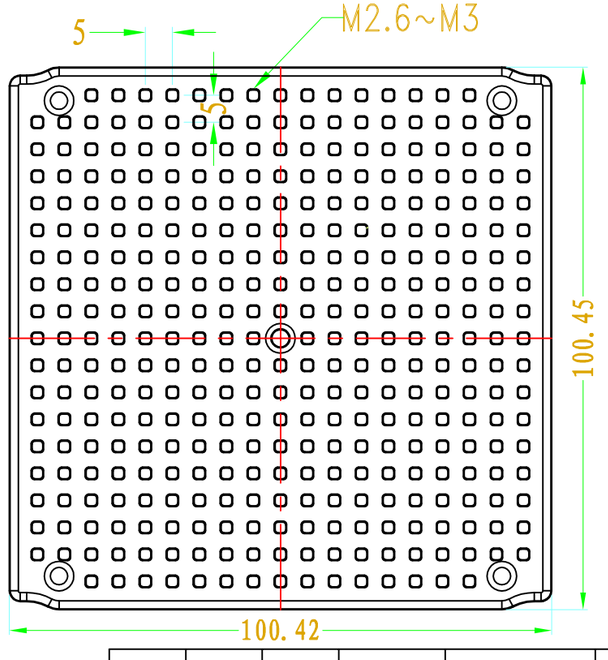

Drawing	Auditing	Confirm	Product Name	Water proof Enclosure	Project View		A
			Product Type	BWP 10209	Drawing Scale	1:1 (MM)	

BAHAR ENCLOSURE