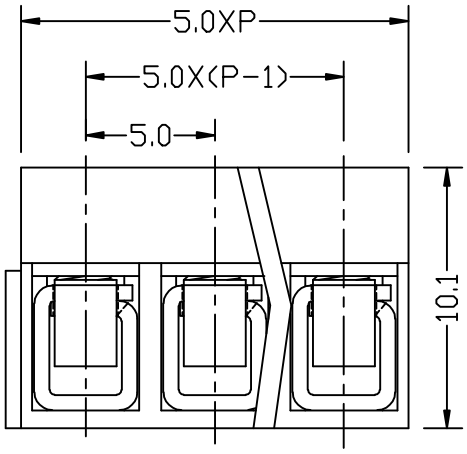

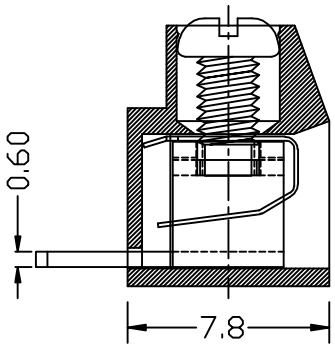

300V 10A 26-14AWG 2.5mm²
Poles: 2P&3P-24P
Pitch: 5.0mm(.197")

Materials
Housing: PA66(UL 94V-0)
Wire Protector: Stainless Steel
Solder Pin: Brass,Tin Plated
Screw: M2.5,Steel(A3),Zinc Plated
Torque: 0.4N.m

设计/Designed by	绘图/Drawing by	审核/Checked by	批准/Approved by	未注公差 General Tolerance
				x. ±0.2 x.° ±2°
新莱亚电子 XINLAIYA ELECTRONIC CO.,LTD		图名/Title: XY126R-5.0	文件编号/File No.	.x ±0.1 .x° ±1°
			页序/Sheet	.xx ±0.05 .xx°±0.5°
		备注/Remark		.xxx ±0.01
				单位/Units: mm

序号/RevNo.	更改记录/Revision note	签名/Signature	日期/Date