序号/RevNo.	名称 /Title	文件编号/File No.
1	XY305V端子	QJ/XYT-2126101
2	XY166塑件	QJ/XYT-2122101
3	XY305簧片	QJ/XYT-2126102
4	XY166螺丝	QJ/XYT-2126103

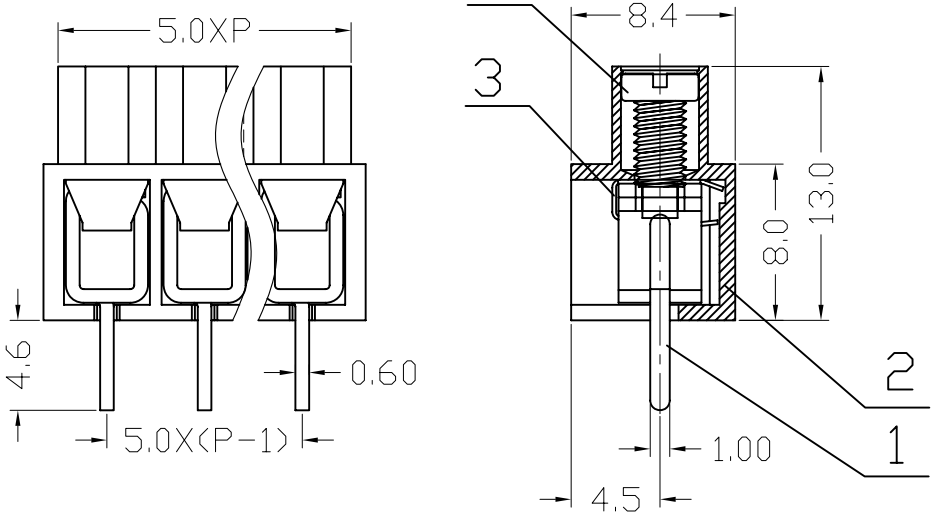

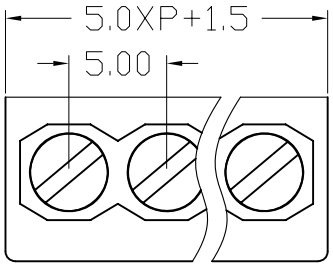

300V 15A 22-12AWG 2.5mm²
Poles: 2P,3P-12P
Pitch: 5.0mm(.197")

Material
Housing: PA66(UL 94V-0)
Wire guard: Stainless Steel
Solder Pin: Brass,Tin Plated
Screw: M2.5 steel(A3),Zinc Plated
Torque: 0.4N.m

设计/Designed by	绘图 /Drawing by	审核 /Checked by	批准 /Approved by	未注公差 General Tolerance
				x. ± 0.2 x.° ± 2° .x ± 0.1 .x° ± 1° .xx ± 0.05 .xx° ± 0.5° .xxx ± 0.01

新莱亚电子
XINLAIYA ELECTRONIC CO.,LTD

图名 /Title	文件编号/File No.
XY166 产品图	QJ/XYT-2222100
备注 /Remark	页序 /Sheet

单位 /Units: mm

序号/RevNo.	更改记录 /Revision note	签名 /Signature	日期 /Date