BWP 10602

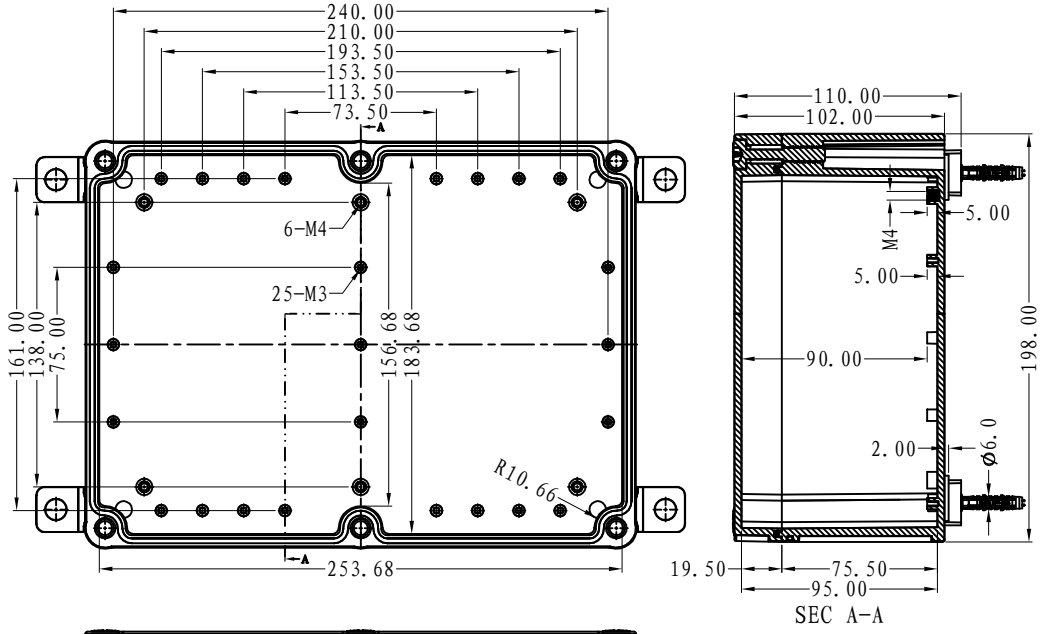

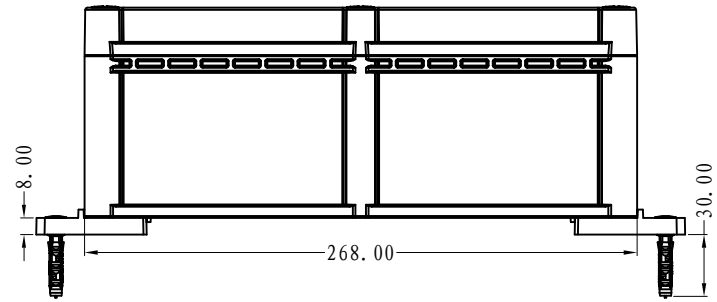

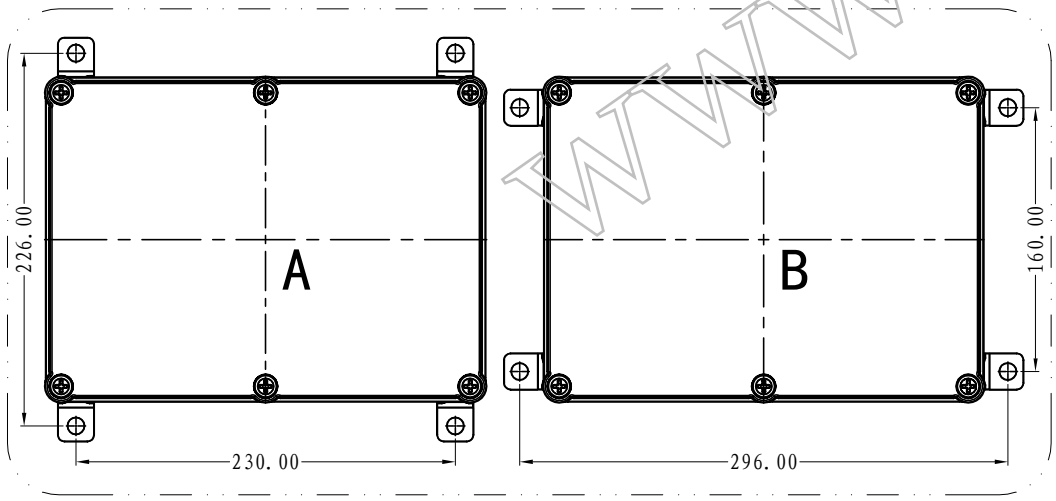

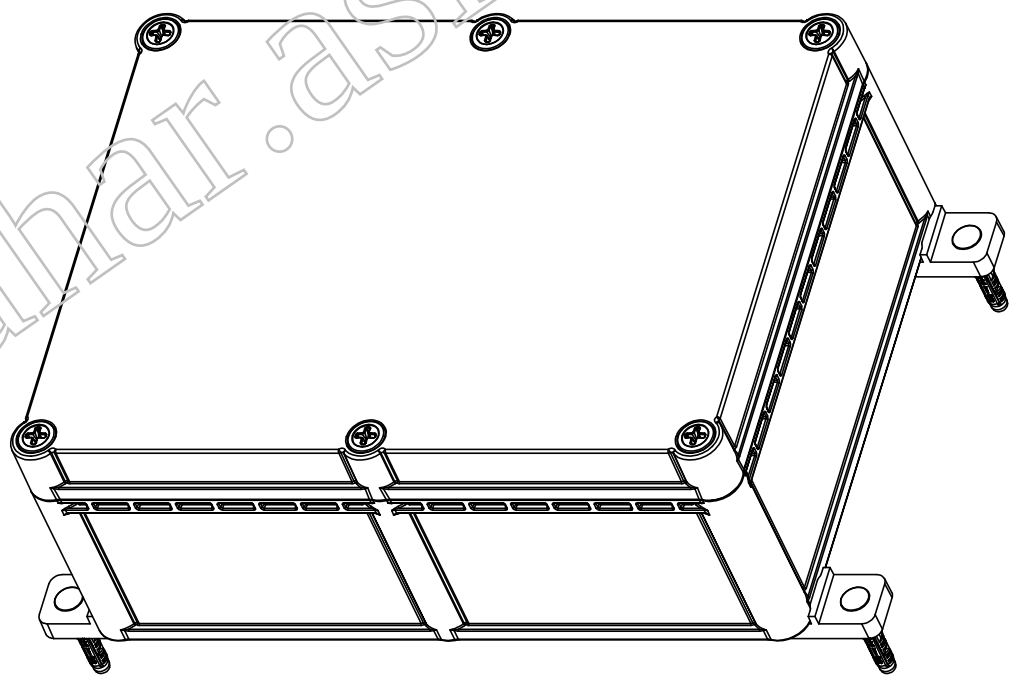

www.bahar.asia

BAHAR
WWW.BAHAR.ASIA

Accessories

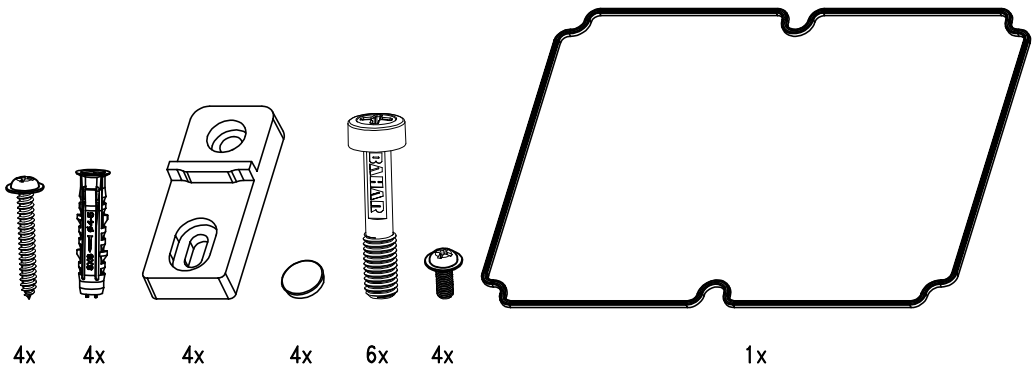

①

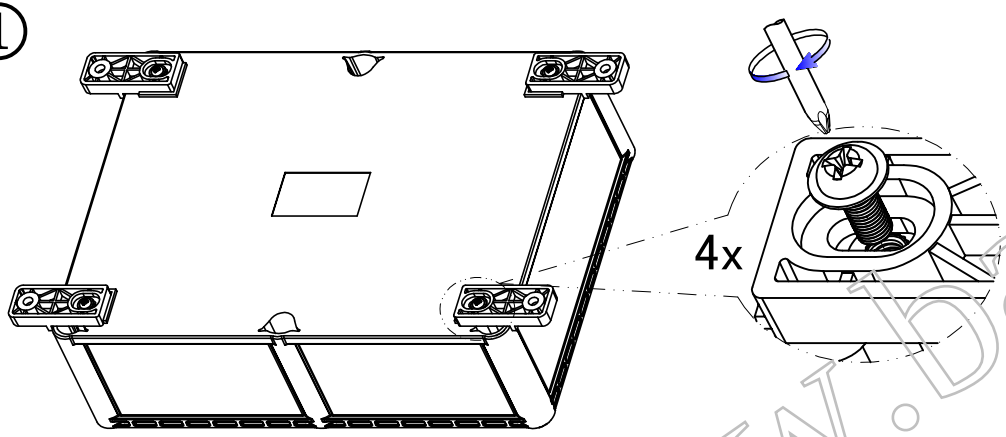

②

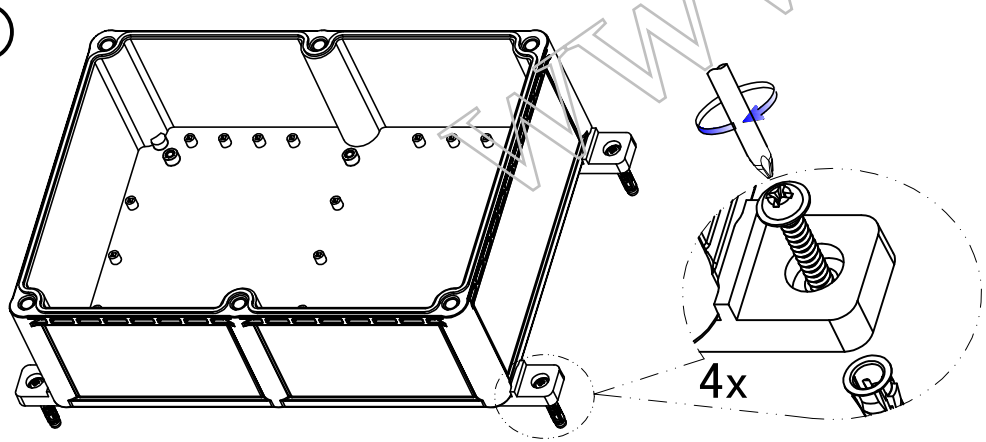

③

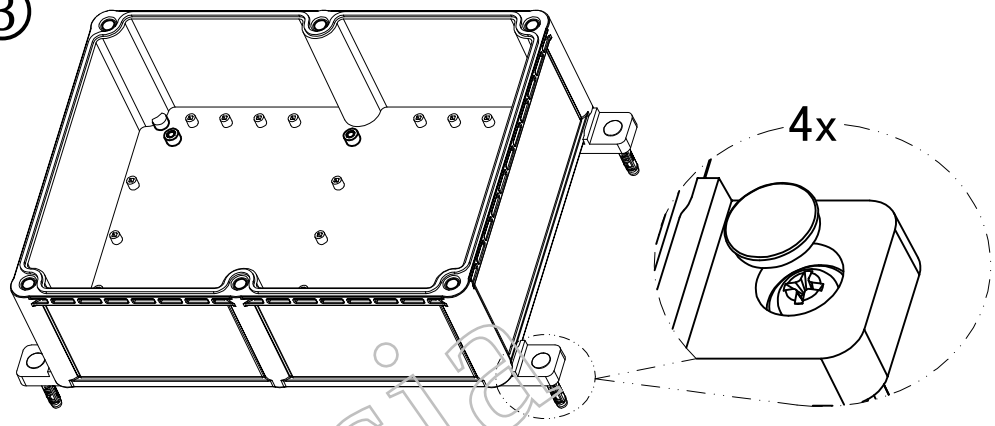

④

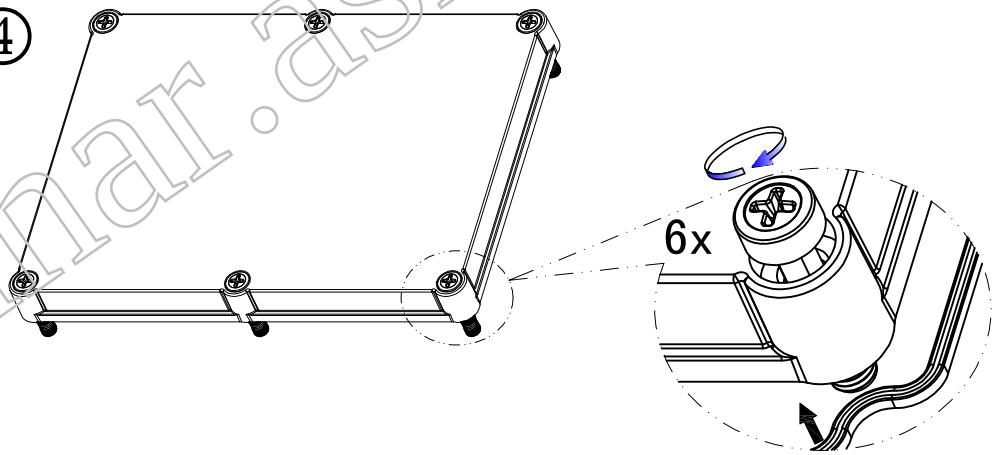

⑤

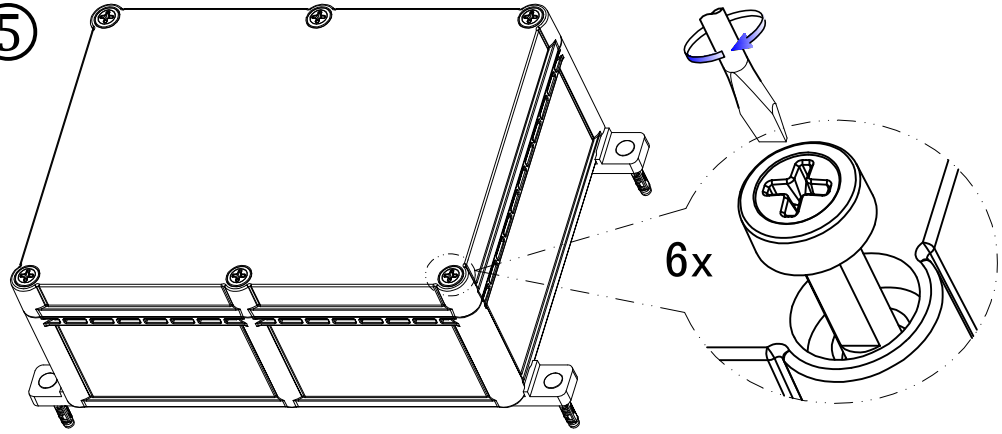

www.bahar.asia