序号/Revlo.	名称/Title	文件编号/File No.
1	XY330B 端子	QJ/XYT-2133201
2	XY330B 塑件	QJ/XYT-2133202

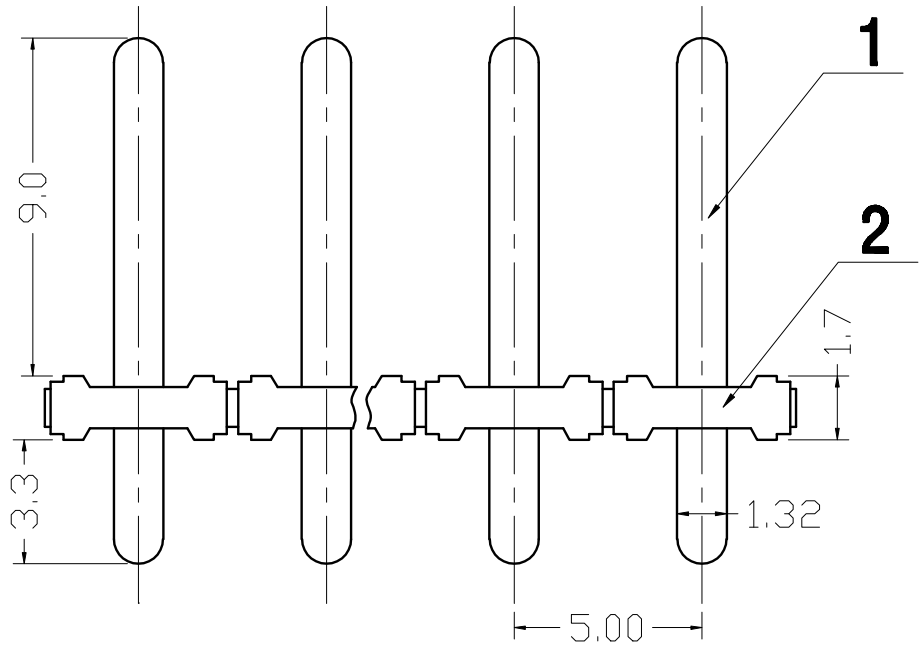

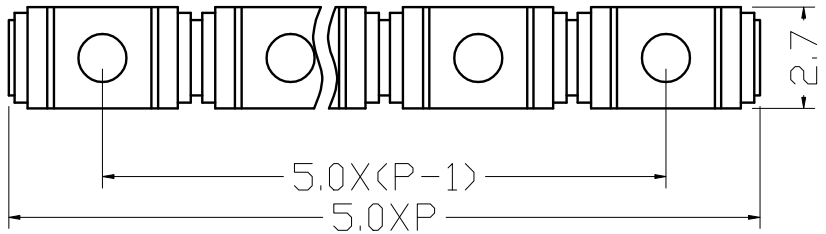

300V 10A
Poles: (2-24P)
Pitch: 5.0mm(.197")

Materials
Housing: PA66(UL 94V-0)
Solder Pin: Brass,Tin Plated

设计/Designed by	绘图/Drawing by	审核/Checked by	批准/Approved by	未注公差 General Tolerance
				x. ±0.2 x.° ±2° .x ±0.1 .x° ±1° .xx ±0.05 .xx° ±0.5° .xxx ±0.01
新莱亚电子 XINLAIYA ELECTRONIC CO.,LTD		图名/File name: XY330VB-5.0	文件编号/File No.: QJ/XYT-2233200	
			页序/Sheet:	
		备注/Remark		单位/Units: mm