序号/RevNo.	名称/Title	文件编号/File No.
1	Screws	QJ/XYT-2148101
2	Housing	QJ/XYT-2135101
3	Clamping	QJ/XYT-2135102
4	Wire Cage	QJ/XYT-2135103

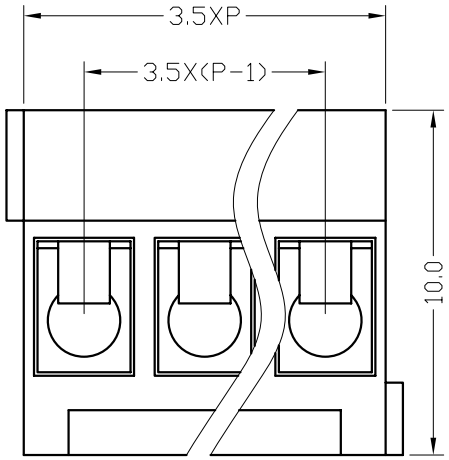

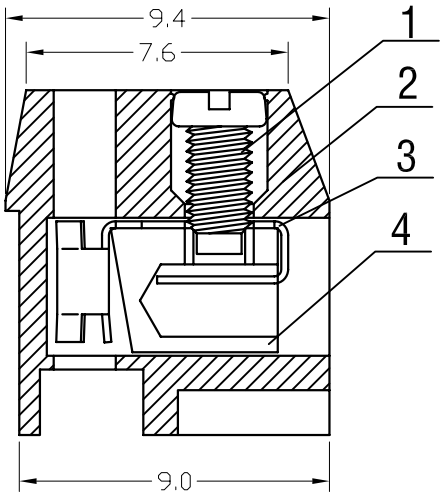

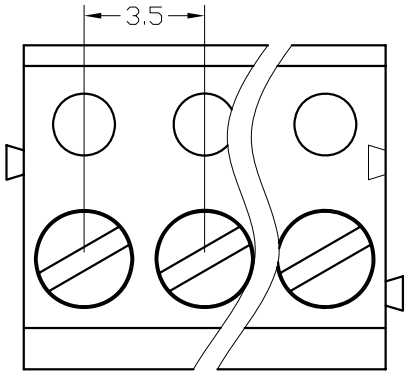

Electrical

300V 8A 28-16AWG 1.0mm^2

Poles: 2P&3P-24P

Pitch: 3.5mm(.138″)

Withstanding Voltage:AC2000V/Min

Materials

Housing: PBT(UL 94V-0)

Wire Cage: Brass,Nickel Plated

Clamping: Phosphor Bronze,Nickel Plated

Screw: M2,Steel(A3),Zinc Plated

Torque: 0.2N.m

Operating temperature:-30~+120℃

设计/Designed by	绘图/Drawing by	审核/Checked by	批准/Approved by	未注公差 General Tolerance
				x. ±0.2 x.° ±2° .x ±0.1 .x° ±1° .xx ±0.05 .xx° ±0.5° .xxx ±0.01
新莱亚电子 XINLAIYA ELECTRONIC CO.,LTD		图名/Title: XY333-3.5	文件编号/File No.: QJ/XYT-2235100	
			页序/Sheet	
		备注/Remark		单位/Units: mm

序号/RevNo.	更改记录/Revision note	签名/Signature	日期/Date