序号/RevNo.	名称/Title	文件编号/File No.
1	XY304螺丝	QJ/XYT-2150101
2	XY127铜方块 (与XY304铜方块共用)	QJ/XYT-2150102
3	XY127V 端子	QJ/XYT-2139101
4	XY127 塑件	QJ/XYT-2139102

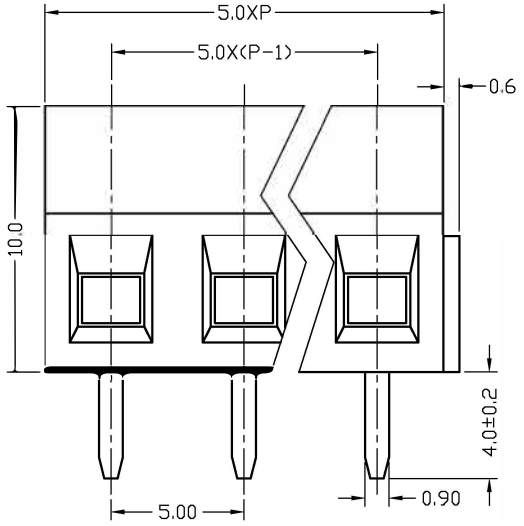

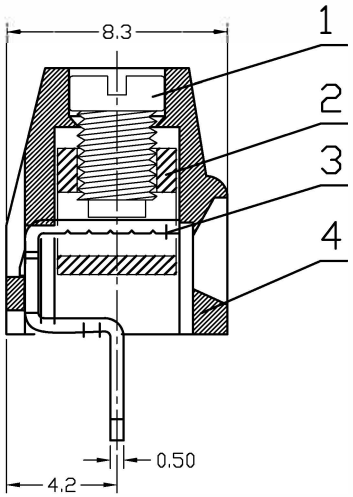

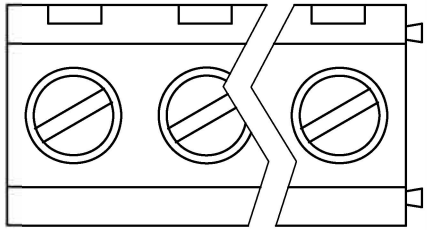

300V 12A 26-14AWG 1.5mm^2

Poles: 2P&3P-24P

Pitch: 5.0mm(.197″)

Materials

Housing: PA66(UL 94V-0)

Wire Cage: Brass,Nickel plated

Solder Pin: Brass,Tin Plated

Screw: M3,Steel,Zinc Plated

Torque: 0.5N.m

设计/Designed by	绘图/Drawing by	审核/Checked by	批准/Approved by	未注公差 General Tolerance
				x. ±0.2 x.° ±2° .x ±0.1 .x° ±1° .xx ±0.05 .xx° ±0.5° .xxx ±0.01
新莱亚电子 XINLAIYA ELECTRONIC CO.,LTD		图名/Title: XY127V 产品图	文件编号/File No.: QJ/XYT-2239100	
		备注/Remark	页序/Sheet	单位/Units: mm

序号/RevNo.	更改记录/Revision note	签名/Signature	日期/Date