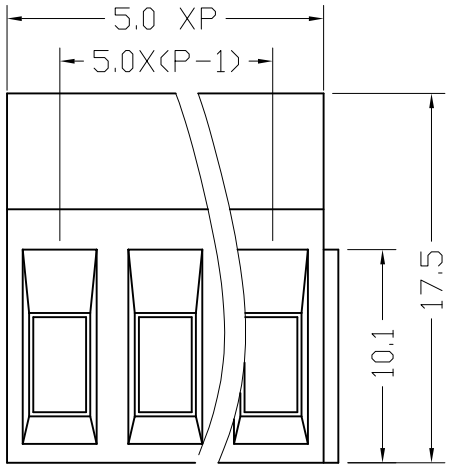

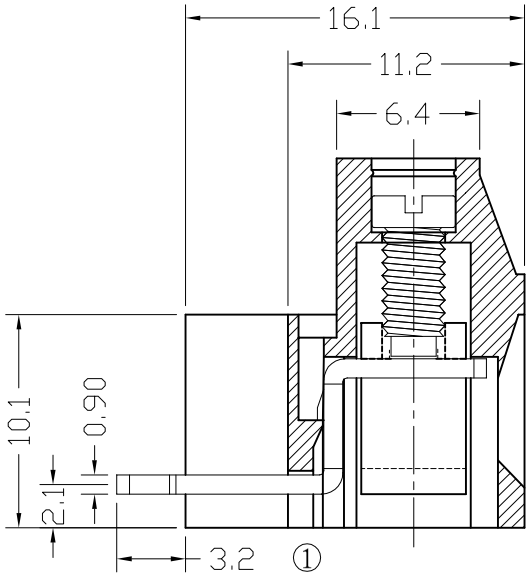

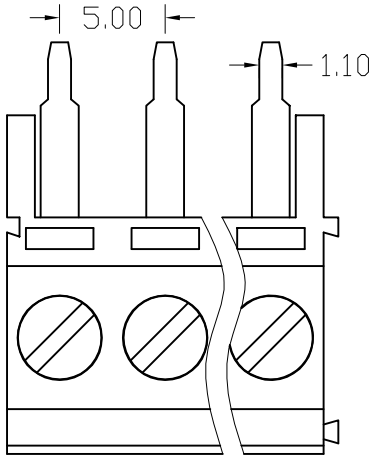

300V 20A 26-12AWG 2.5mm²

Poles: 2P&3P-24P

Pitch: 5.0mm(.197")

Materials

Housing: PA66(UL 94V-0)

Solder Pin: Brass,Tin Plated

Wire Cage: Brass,Nickel Plated

Screw: M3.0,Steel(A3),Zinc Plated

Torque: 0.5N.m

设计/Designed by	绘图/Drawing by	审核/Checked by	批准/Approved by	未注公差 General Tolerance
				x. ±0.2 x.° ±2°
新莱亚电子 XINLAIYA ELECTRONIC CO.,LTD		图名/Title XY129RA-5.0	文件编号/File No.	.x ±0.1 .x° ±1°
			页序/Sheet	.xx ±0.05 .xx°±0.5°
		备注/Remark		.xxx ±0.01 单位/Units: mm

序号/RevNo.	更改记录/Revision note	签名/Signature	日期/Date
1	3.4更改为3.2	王维乐	2010.5.21