序号RevNo.	名称/Title	文件编号/File No.
1	XY135 螺丝	QJ/XYT-2143101
2	XY135 方块	QJ/XYT-2143102
3	XY135 端子	QJ/XYT-2143103
4	XY135 塑件	QJ/XYT-2143104

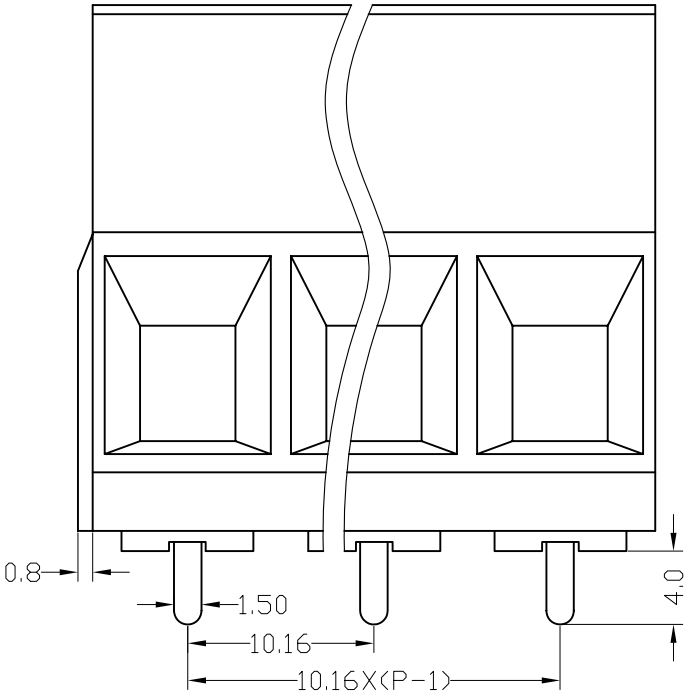

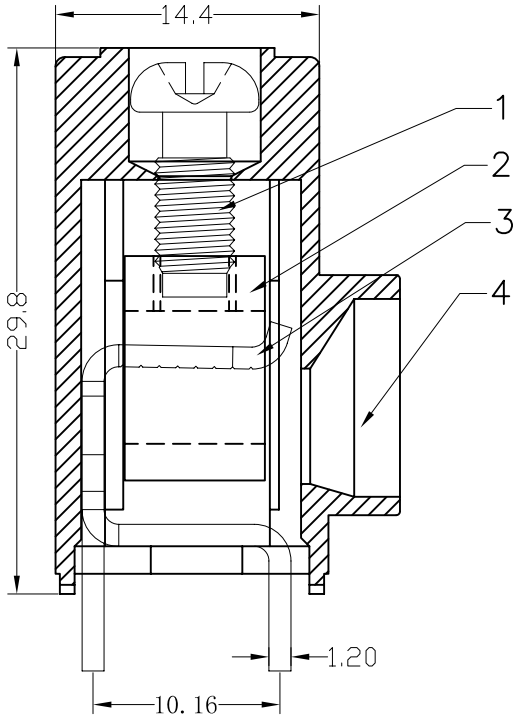

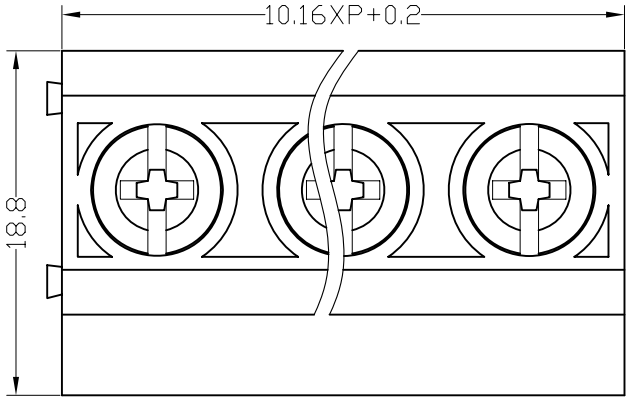

300V 21A 20-6AWG 10.0mm^2

Poles: 2P.3P-24P

Pitch: 10.16mm(.400")

Materials

Housing: PA66(UL 94V-0)

Solder Pin: Brass,Tin Plated

Screw: M4.5,Steel(A3),Zinc Plated

Torque: 1.2N.m

设计/Designed by	绘图/Drawing by	审核/Checked by	批准/Approved by	未注公差 General Tolerance
				x. ±0.2 x.° ±2° .x ±0.1 .x° ±1° .xx ±0.05 .xx° ±0.5° .xxx ±0.01
新莱亚电子 XINLAIYA ELECTRONIC CO.,LTD		图名/Title: XY135 产品图	文件编号/File No.: QJ/XYT-2243100	
		备注/Remark	页序/Sheet	单位/Units: mm

?? /RevNo.	???? /Revision note	?? /Signature	?? /Date