序号/RevNo.	名称/Title	文件编号/File No.
1	XY302 螺丝	QJ/XYT-2148101
2	XY302 铜方块	QJ/XYT-2148102
3	XY302V 端子	QJ/XYT-2148104
4	XY302 塑件	QJ/XYT-2148103

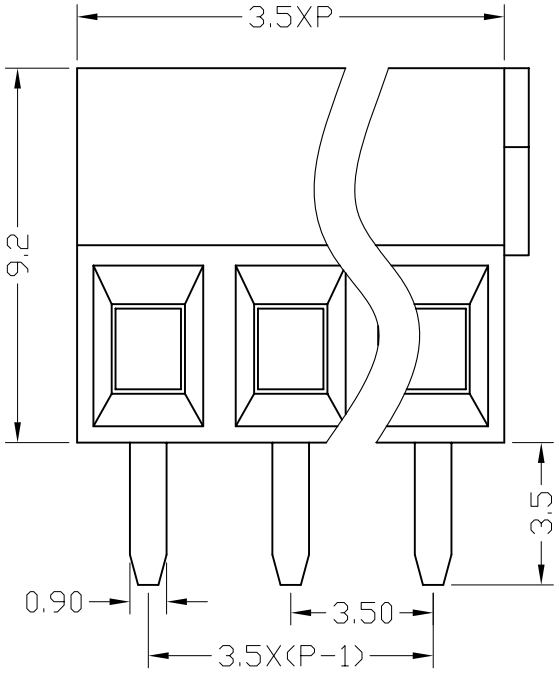

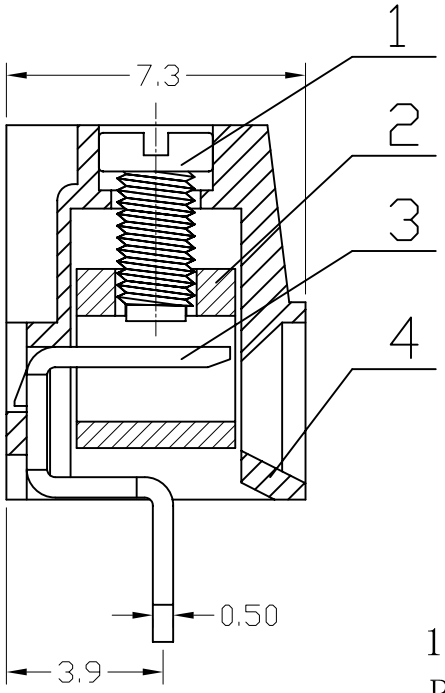

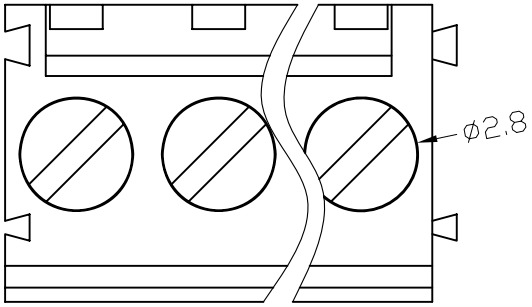

150V 10A 26-16AWG 1.0mm^2
Poles: 2P&3P-24P
Pitch: 3.5mm(.138")

Materials
Housing: PA66(UL 94V-0)
Solder Pin: Brass,Tin Plated
Wire Cage: Brass,Nickel Plated
Screw: M2,Steel(A3),Zinc Plated
Torque: 0.2N.m

设计/Designed by	绘图/Drawing by	审核/Checked by	批准/Approved by	未注公差 General Tolerance
				x. ±0.2 x.° ±2° .x ±0.1 .x° ±1° .xx ±0.05 .xx° ±0.5° .xxx ±0.01
新莱亚电子 XINLAIYA ELECTRONIC CO.,LTD		图名/Title: XY302V-3.5 产品图	文件编号/File No.: QJ/XYT-2248100	
		备注/Remark	页序/Sheet	单位/Units: mm

序号/RevNo.	更改记录/Revision note	签名/Signature	日期/Date