序号/RevNo.	名称 /Title	文件编号/File No.
1	XY304 螺丝	QJ/XYT-2150101
2	XY304 铜方块	QJ/XYT-2150102
3	XY304V 端子	QJ/XYT-2150103
4	XY304 A塑件5.0	QJ/XYT-2150104

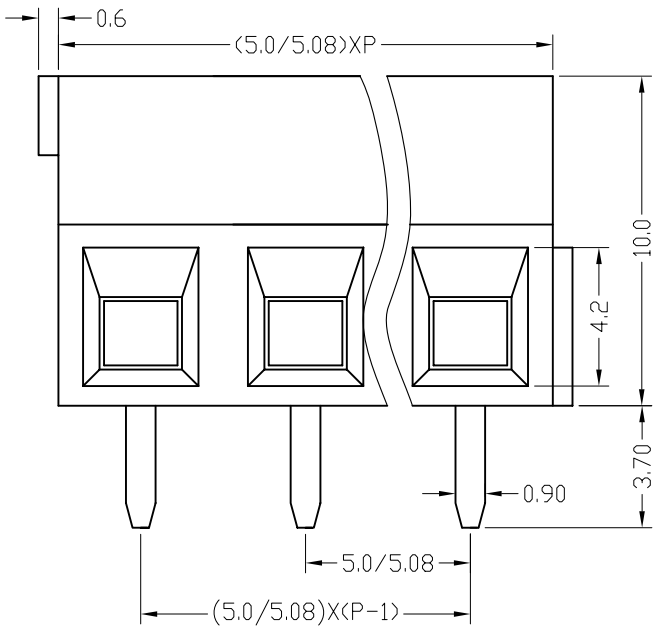

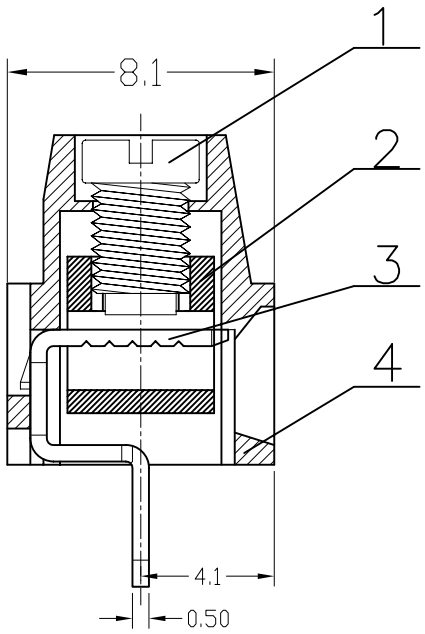

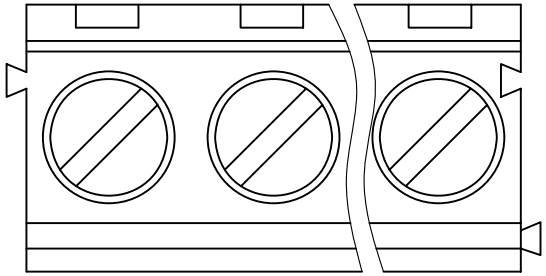

300V 12A 26-14AWG 1.5mm^2

Poles: 2P&3P-24P

Pitch: 5.0mm(.197")/5.08mm(.200")

Materials

Housing: PA66(UL 94V-0)

Solder Pin: Brass,Tin Plated

Wire Cage: Brass,Nickel Plated

Screw: M3.0,Steel(A3),Zinc Plated

Torque: 0.5N.m

设计/Designed by	绘图 /Drawing by	审核 /Checked by	批准 /Approved by	未注公差 General Tolerance
				x. ± 0.2 x.° ± 2°
新莱亚电子 XINLAIYA ELECTRONIC CO.,LTD		图名 /Title: XY304V 产品图	文件编号 /File No.: QJ/XYT-2250100 QJ/XYT-2250200	.x ± 0.1 .x° ± 1°
			页序 /Sheet	.xx ± 0.05 .xx° ± 0.5°
		备注 /Remark		.xxx ± 0.01 单位 /Units: mm

?? /RevNo.	???? /Revision note	?? /Signature	?? /Date