REV.	DESCRIPTION OF REVISIONS	APPR.	CHKD.	DRAW.	DATE
1	Original reversion	lucky	lucky	Roy	2023/10/25

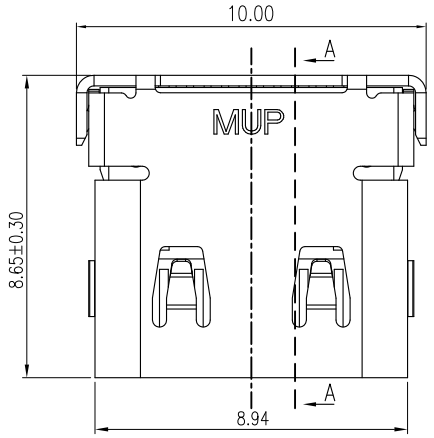

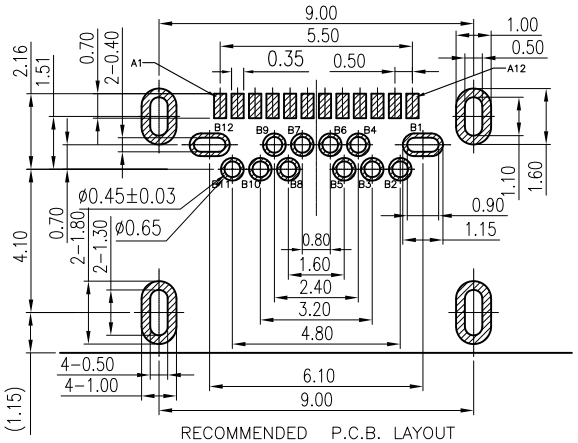

RECOMMENDED P.C.B. LAYOUT
TOLERANCE UNSPECIFIED ±0.05mm

NOTE:
1. MECHANICAL:
   1-1.MATING FORCE: 0.5~2.0Kgf
   1-2.UMMATING FORCE: Initial: 0.8~2.0Kgf
   After 500 to 10,000cycles: 0.6~2.0Kgf
   1-3.FREQUENCE:500±50 CYCLES/HOUR,10000 CYCLES;
2. ELECTRICAL CHARACTERISTICS:
   2-1. CURRENT RATING:
   VBUS Pins (A4,A9,B4,B9): 5A Max;
   1.25 Amps MAX. for Vconn (B5) with return path through the corresponding GND pins(Pin A1, A12, B1, B12).
   Other All Pins 0.25A/Pin
   2-2. INITIAL CONTACT RESISTANCE:40mΩ Max.
   2-3. INSULATION RESISTANCE:100MΩ MIN
   2-4. WITHSTANDING VOLTAGE:100V AC,1 MINUTE;
3. ENVIRONMENTAL
   TEMPERATRUE RANGE: -40°C TO +85°C.
4. Recommended thickness of steel mesh T=0.12mm.

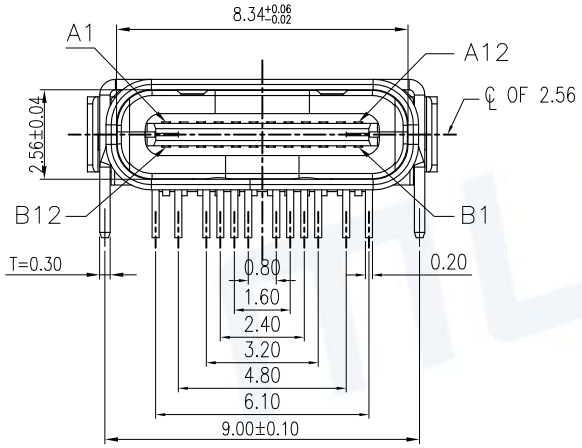

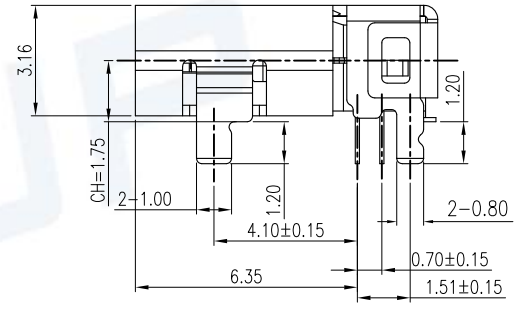

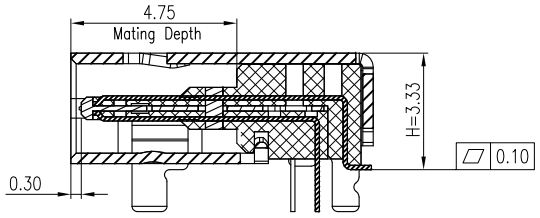

SECTION A-A

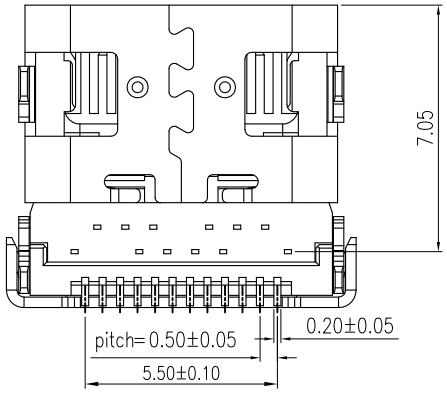

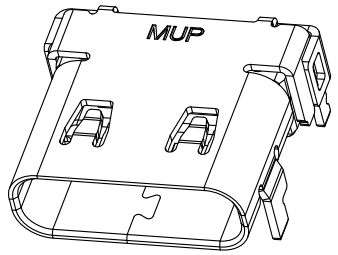

A1	GND	B12	GND
A2	SSTXP1	B11	SSRXP1
A3	SSTXN1	B10	SSRXN1
A4	VBUS	B9	VBUS
A5	CC1	B8	SBU2
A6	DP1	B7	DN2
A7	DN1	B6	DP2
A8	SBU1	B5	CC2
A9	VBUS	B4	VBUS
A10	SSRXN2	B3	SSTXN2
A11	SSRXP2	B2	SSTXP2
A12	GND	B1	GND
PIN	SIGNAL NAME	PIN	SIGNAL NAME

ITEM	PART NAME	Q'TY	MATERIAL	FINISH
1	Molding	1	THERMOPLASTIC	Black, UL94V-0
2	CONTACT	24	HIGH CONDUCTIVITY COPPER	Contact area: Au G/F
3	SHELL	1	STAINLESS STEEL	Ni plated over all
4	MID-PLATE	1	STAINLESS STEEL	RINSE

Unless otherwise specified, other tolerance are:

X	±0.40	X°	±5°
X.X	±0.30	X.X°	±4°
X.XX	±0.20	X.XX°	±3°
X.XXX	±0.10	X.XXX°	±2°

PROJ. | UNIT mm | SCALE 1:1

CUSTOMER DRAWING

RoHS PROCESS COMPLIANT

MUP® MUP INDUSTRIAL CO.,LTD.

NAME: **USB Type C Hybrid Right-Angle Receptacle**

MODEL NO: **MUP-U20003-04**

TYPE : **24Pin & USB 3.1 Without GND-PLATE L=8.65**

DRAW	Roy	2023/10/25
CHECKED	lucky	2023/10/25
APPROVAL	lucky	2023/10/25

DWG NO.: DWG-U20003-04-01

SHEET 1/2 | REVISION 1

REV.	DESCRIPTION OF REVISIONS	APPR.	CHKD.	DRAW.	DATE
1	Original reversion	lucky	lucky	Roy	2023/10/25

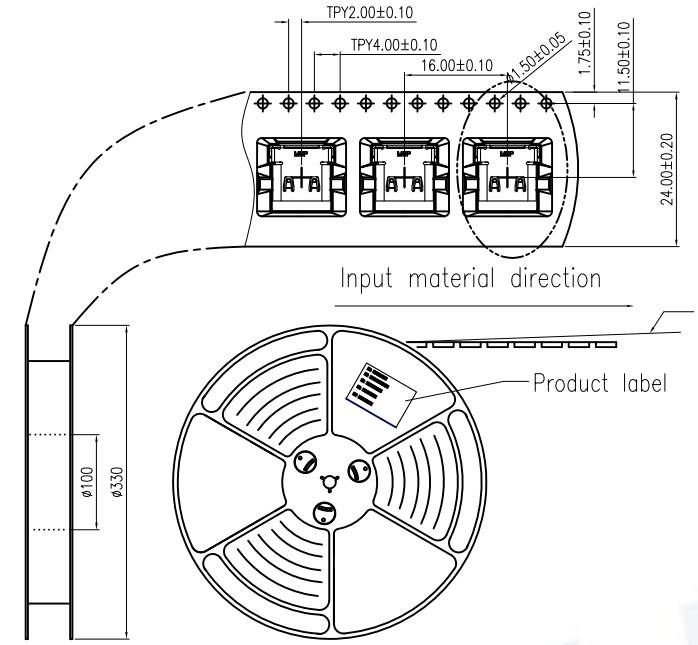

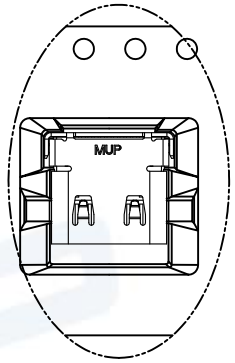

Direction of Production

NOTES

1. NUMBER OF CONNECTORS:850PCS/REEL
2. LEAD TAPE LENGTH

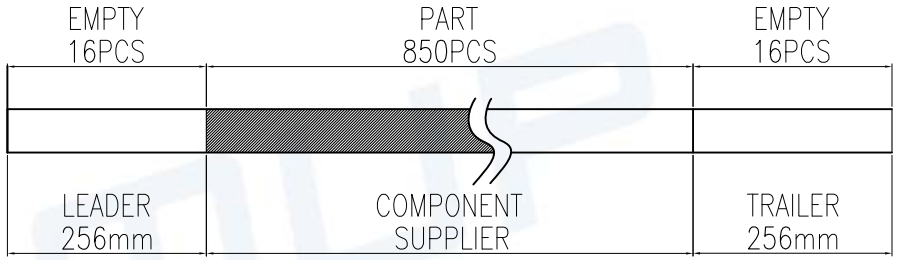

3. QUANTITY:8500/CARTON

3. QUANTITY:8500/CARTON

4. WEIGHT :
   - 4.1 NET WEIGHT : 5.05 Kg
   - 4.2 GROSS WEIGHT : 9.6 Kg
5. Meas:350Lx350Wx315H mm

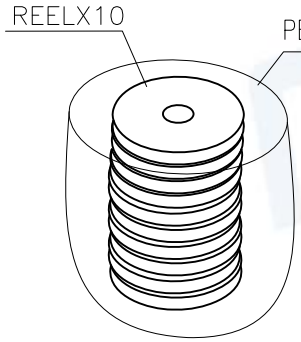

Put waterproof PE bag inside the box and add two desiccants。

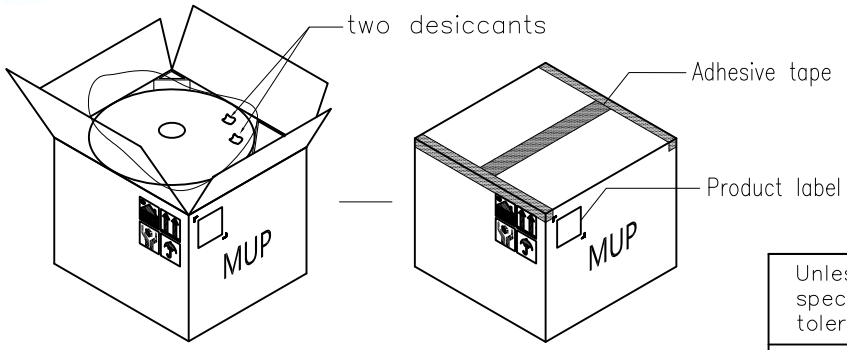

Unless otherwise specified, other tolerance are:			
X ±0.40	X° ±5°		
X.X ±0.30	X.X° ±4°		
X.XX ±0.20	X.XX° ±3°		
X.XXX ±0.10	X.XXX° ±2°		
PROJ.	UNIT mm	SCALE 1:1	
CUSTOMER DRAWING			

P/b RoHS PROCESS COMPLIANT

MUP® MUP INDUSTRIAL CO.,LTD.

NAME:	USB Type C Hybrid Right-Angle Receptacle		
MODEL NO:	MUP-U20003-04		
TYPE :	24Pin & USB 3.1 Without GND-PLATE L=8.65		
DRAW	Roy 2023/10/25	DWG NO.:	DWG-U20003-04-01
CHECKED	lucky 2023/10/25	SHEET 2/2	REVISION 1
APPROVAL	lucky 2023/10/25		