REV.	DESCRIPTION OF REVISIONS	APPR.	CHKD.	DRAW.	DATE
1	Original reversion	lucky	lucky	Roy	2020/07/05
2	Change product model No.	lucky	lucky	Roy	2023/10/25

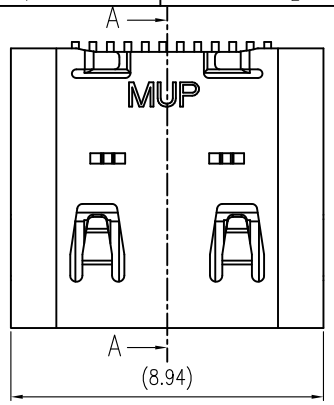

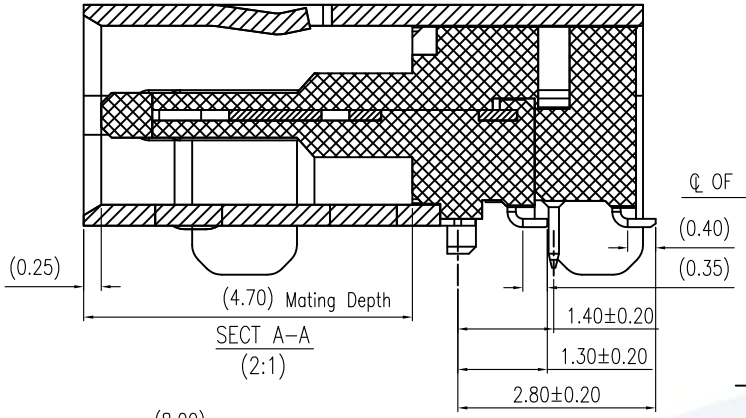

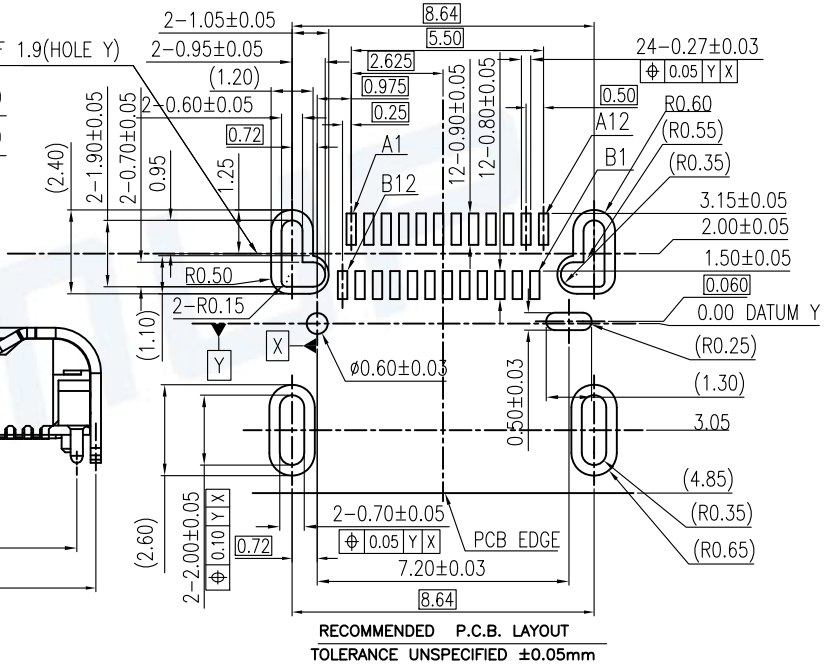

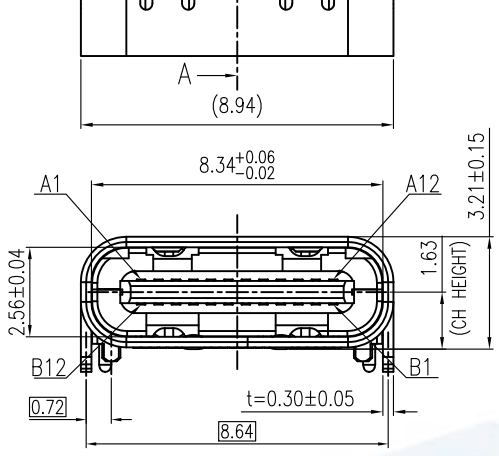

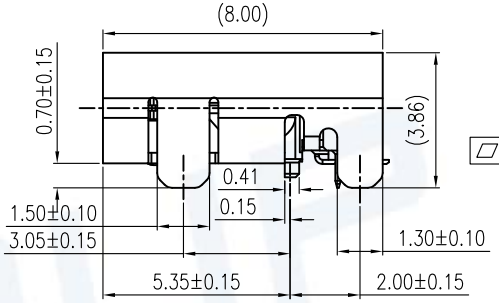

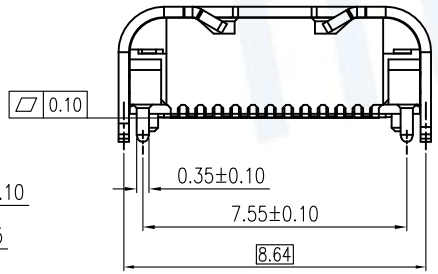

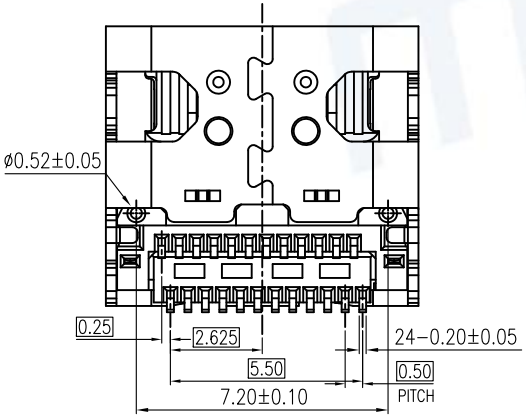

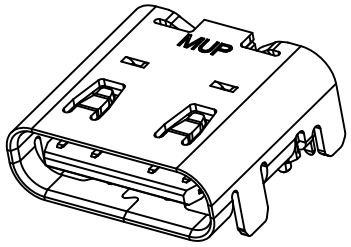

A1	GND	B12	GND
A2	SSTXP1	B11	SSRXP1
A3	SSTXN1	B10	SSRXN1
A4	VBUS	B9	VBUS
A5	CC1	B8	SBU2
A6	DP1	B7	DN2
A7	DN1	B6	DP2
A8	SBU1	B5	CC2
A9	VBUS	B4	VBUS
A10	SSRXN2	B3	SSTXN2
A11	SSRXP2	B2	SSTXP2
A12	GND	B1	GND
PIN	SIGNAL NAME	PIN	SIGNAL NAME

NOTE:
1. MECHANICAL:
   1-1.MATING FORCE: 0.5~2.0Kgf
   1-2.UMMATING FORCE: Initial: 0.8~2.0Kgf
   After 500 to 10,000cycles: 0.6~2.0Kgf
   1-3.FREQUENCE:500±50 CYCLES/HOUR,10000 CYCLES;
2. ELECTRICAL CHARACTERISTICS:
   2-1. CURRENT RATING: 1.25A/PIN FOR FOR VBUS AND GND
   0.25 A FOR OTHER PINS
   2-2. INITIAL CONTACT RESISTANCE:40mΩ Max.
   2-3. INSULATION RESISTANCE:100MΩ MIN
   2-4. WITHSTANDING VOLTAGE:100V AC,1 MINUTE;
5. ENVIRONMENTAL
   TEMPERATRUE RANGE: -40°C TO +85°C.

Pb RoHS
PROCESS COMPLIANT

ITEM	PART NAME	Q'TY	MATERIAL	FINISH
1	Molding	1	THERMOPLASTIC	Black, UL94V-0
2	CONTACT	24	HIGH CONDUCTIVITY COPPER	Contact area: Au 3u"
3	SHELL	1	STAINLESS STEEL	Ni plated over all
4	MID-PLATE	1	STAINLESS STEEL	Ni plated over all

Unless otherwise specified, other tolerance are:

X	±0.40	X°	±5°
X.X	±0.30	X.X°	±4°
X.XX	±0.20	X.XX°	±3°
X.XXX	±0.10	X.XXX°	±2°

PROJ. | UNIT mm | SCALE 1:1

CUSTOMER DRAWING

MUP® MUP INDUSTRIAL CO.,LTD.

NAME: USB Type C Dual-Row SMT Receptacle
MODEL NO: MUP-U20201-07
TYPE : 24P & USB 3.1 With GND-PLATE

DRAW	Roy	2020/07/05
CHECKED	lucky	2020/07/05
APPROVAL	lucky	2020/07/05

DWG NO.: DWG-U20201-07-01
SHEET 1/2
REVISION 2

REV.	DESCRIPTION OF REVISIONS	APPR.	CHKD.	DRAW.	DATE
1	Original reversion	lucky	lucky	Roy	2020/07/05
2	Change product model No.	lucky	lucky	Roy	2023/10/25

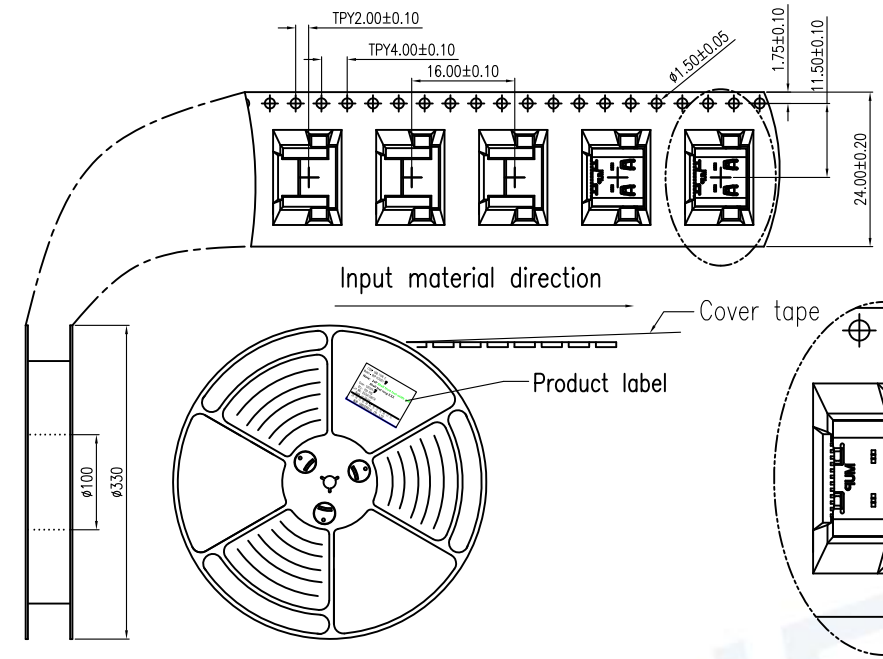

NOTES

1. NUMBER OF CONNECTORS:900PCS/REEL
2. LEAD TAPE LENGTH

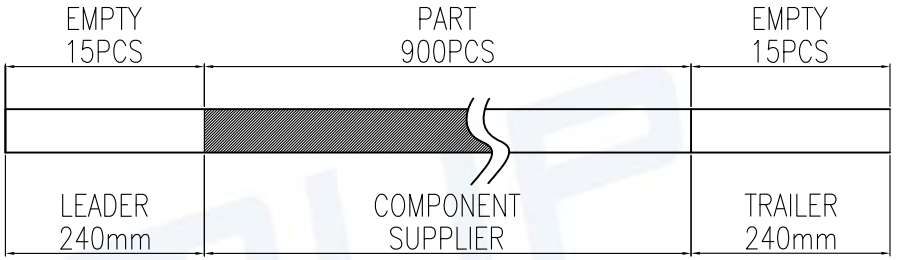

3. QUANTITY:9000/CARTON
4. WEIGHT :
   - 4.1 NET WEIGHT : 4.9 Kg
   - 4.2 GROSS WEIGHT : 8.9 Kg
5. Meas:350Lx350Wx315H mm

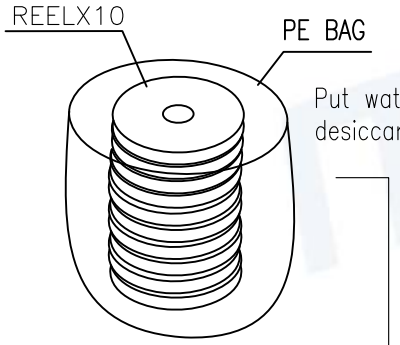

Put waterproof PE bag inside the box and add two desiccants。

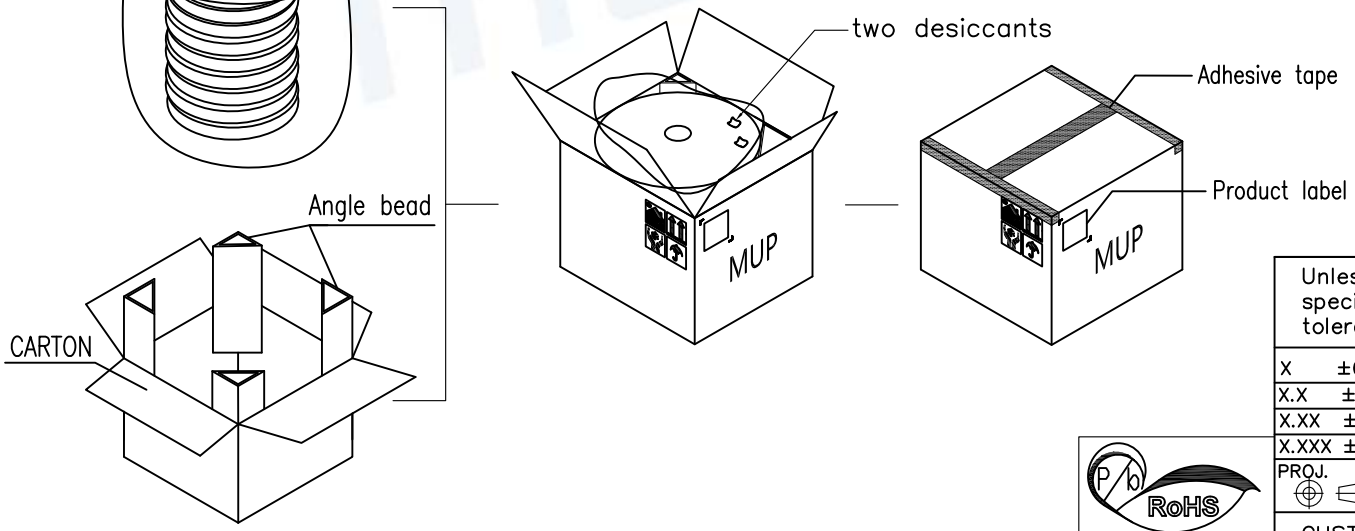

Unless otherwise specified, other tolerance are:			
X ±0.40	X° ±5°		
X.X ±0.30	X.X° ±4°		
X.XX ±0.20	X.XX° ±3°		
X.XXX ±0.10	X.XXX° ±2°		
PROJ.	UNIT mm	SCALE 1:1	
CUSTOMER DRAWING			

MUP® MUP INDUSTRIAL CO.,LTD.

NAME:	USB Type C Dual-Row SMT Receptacle		
MODEL NO:	MUP-U20201-07		
TYPE :	24P & USB 3.1 With GND-PLATE		
DRAW	Roy	2020/07/05	DWG NO.: DWG-U20201-07-01
CHECKED	lucky	2020/07/05	SHEET 2/2 / REVISION 2
APPROVAL	lucky	2020/07/05	

Pb RoHS PROCESS COMPLIANT