REV.	DESCRIPTION OF REVISIONS	APPR.	CHKD.	DRAW.	DATE
1	Original reversion	lucky	lucky	Roy	2024/03/05

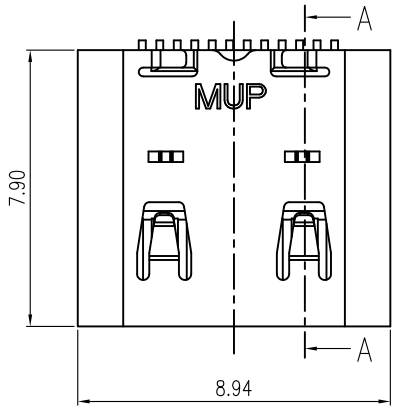

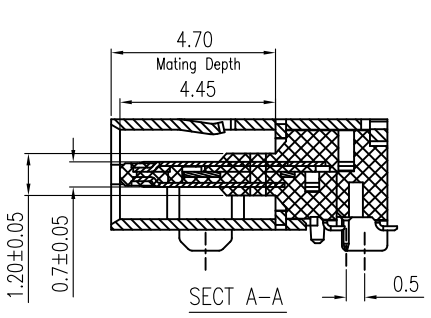

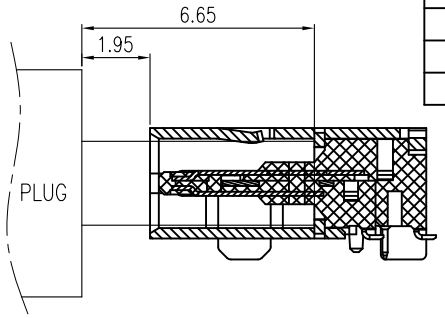

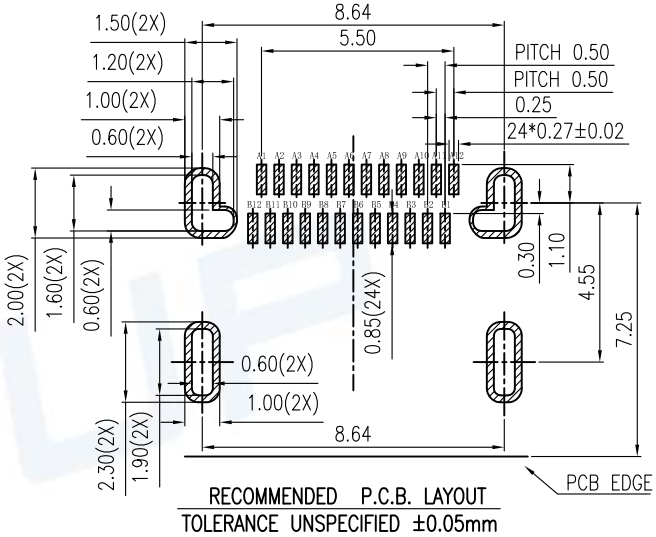

RECOMMENDED P.C.B. LAYOUT
TOLERANCE UNSPECIFIED ±0.05mm

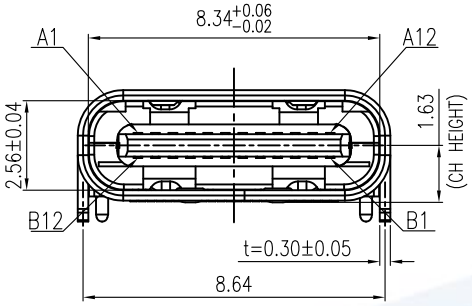

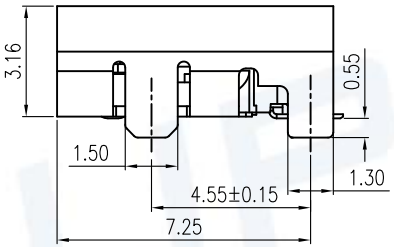

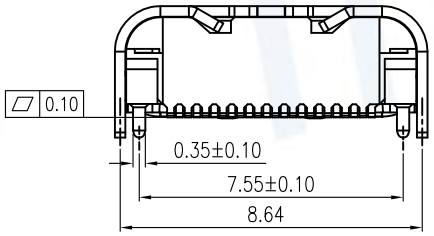

A1	GND	B12	GND
A2	SSTXP1	B11	SSRXP1
A3	SSTXN1	B10	SSRXN1
A4	VBUS	B9	VBUS
A5	CC1	B8	SBU2
A6	DP1	B7	DN2
A7	DN1	B6	DP2
A8	SBU1	B5	CC2
A9	VBUS	B4	VBUS
A10	SSRXN2	B3	SSTXN2
A11	SSRXP2	B2	SSTXP2
A12	GND	B1	GND
PIN	SIGNAL NAME	PIN	SIGNAL NAME

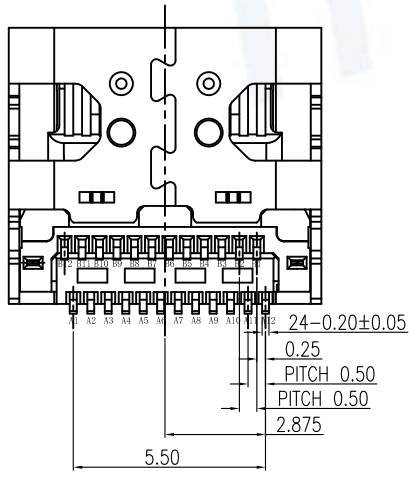

NOTE:
1. MECHANICAL:
   1-1.MATING FORCE: 0.5~2.0Kgf
   1-2.UMMATING FORCE: Initial: 0.8~2.0Kgf
   After 500 to 10,000cycles: 0.6~2.0Kgf
   1-3.FREQUENCE:500±50 CYCLES/HOUR,10000 CYCLES;
2. ELECTRICAL CHARACTERISTICS:
   2-1. CURRENT RATING:
   VBUS Pins (A4,A9,B4,B9): 5A Max;
   1.25 Amps MAX. for Vconn (B5) with return path through the corresponding GND pins(Pin A1, A12, B1, B12).
   Other All Pins 0.25A/Pin
   2-2. INITIAL CONTACT RESISTANCE:40mΩ Max.
   2-3. INSULATION RESISTANCE:100MΩ MIN
   2-4. WITHSTANDING VOLTAGE:100V AC,1 MINUTE;
3. ENVIRONMENTAL
   TEMPERATRUE RANGE: -40°C TO +85°C.
4. Recommended thickness of steel mesh T=0.12mm.

ITEM	PART NAME	Q'TY	MATERIAL	FINISH
1	Molding	1	THERMOPLASTIC	Black, UL94V-0
2	CONTACT	24	HIGH CONDUCTIVITY COPPER	Contact area: Au G/F
3	SHELL	1	STAINLESS STEEL	Ni plated over all
4	MID-PLATE	1	STAINLESS STEEL	Ni plated over all

Unless otherwise specified, other tolerance are:

X	±0.40	X°	±5°
X.X	±0.30	X.X°	±4°
X.XX	±0.20	X.XX°	±3°
X.XXX	±0.10	X.XXX°	±2°

PROJ. | UNIT mm | SCALE 1:1

CUSTOMER DRAWING

P/b RoHS PROCESS COMPLIANT

MUP® MUP INDUSTRIAL CO.,LTD.

NAME: USB Type C Dual-Row SMT Receptacle

MODEL NO: MUP-U20202-07

TYPE : 24P & USB 3.1 Without POST

DRAW	Roy	2024/03/05
CHECKED	lucky	2024/03/05
APPROVAL	lucky	2024/03/05

DWG NO.: DWG-U20202-07-01

SHEET 1/2 | REVISION 1

REV.	DESCRIPTION OF REVISIONS	APPR.	CHKD.	DRAW.	DATE
1	Original reversion	lucky	lucky	Roy	2024/03/05

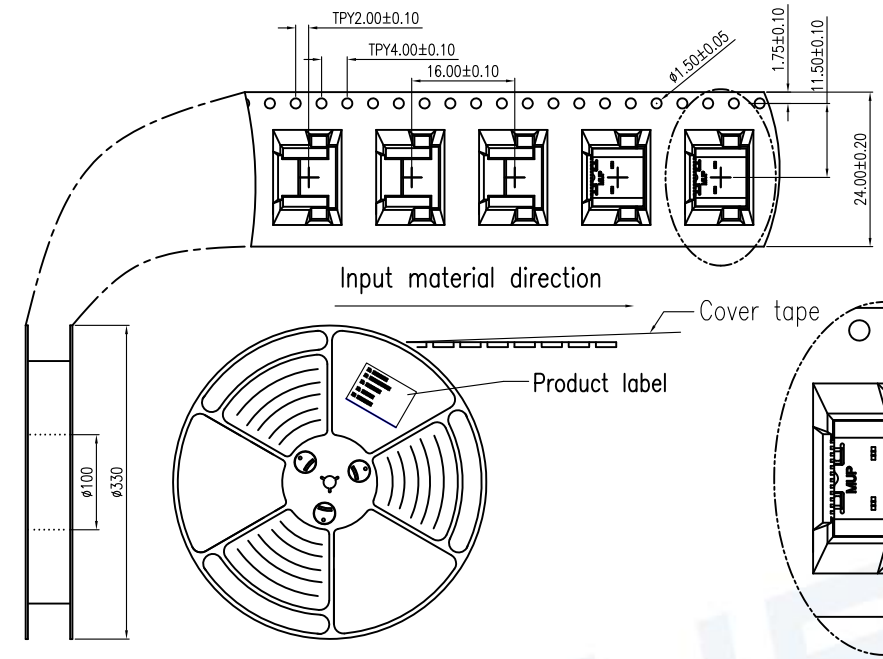

NOTES

1. NUMBER OF CONNECTORS:1050PCS/REEL
2. LEAD TAPE LENGTH

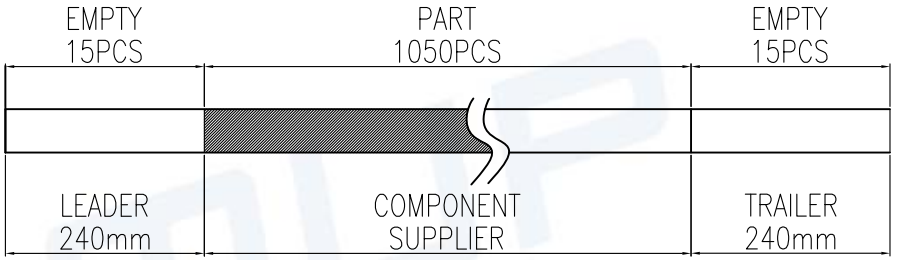

3. QUANTITY:10500/CARTON
4. WEIGHT :
   4.1 NET WEIGHT : 5.43 Kg
   4.2 GROSS WEIGHT : 10.6 Kg
5. Meas:350Lx350Wx315H mm

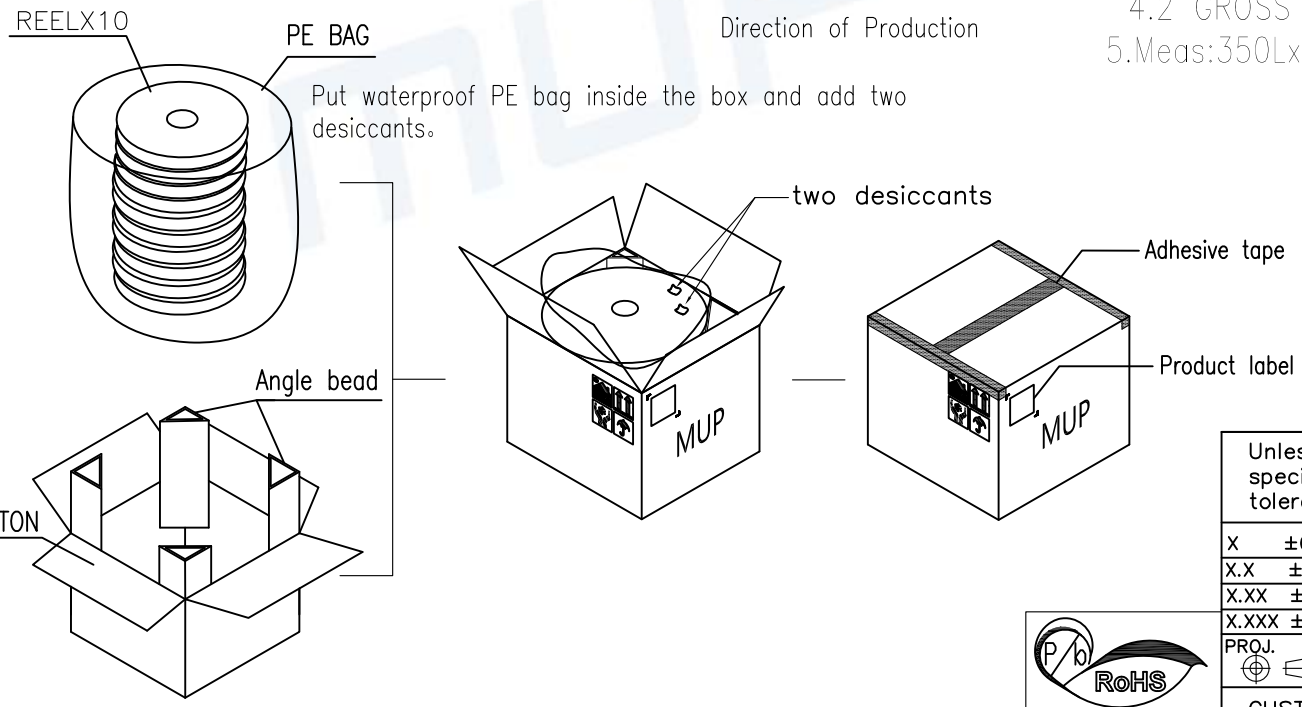

Unless otherwise specified, other tolerance are:			
X ±0.40	X° ±5°		
X.X ±0.30	X.X° ±4°		
X.XX ±0.20	X.XX° ±3°		
X.XXX ±0.10	X.XXX° ±2°		
PROJ.	UNIT mm	SCALE 1:1	
CUSTOMER DRAWING			

RoHS PROCESS COMPLIANT

MUP® MUP INDUSTRIAL CO.,LTD.

NAME:	USB Type C Dual-Row SMT Receptacle		
MODEL NO:	MUP-U20202-07		
TYPE :	24P & USB 3.1 Without POST		
DRAW	Roy 2024/03/05	DWG NO.:	DWG-U20202-07-01
CHECKED	lucky 2024/03/05	SHEET 2/2	REVISION 1
APPROVAL	lucky 2024/03/05		