REV.	DESCRIPTION OF REVISIONS	APPR.	CHKD.	DRAW.	DATE
1	Original reversion	lucky	lucky	Roy	2020/02/15
2	Add RECEPTACLE&PLUG MATED CONTITION	lucky	lucky	Roy	2021/05/13
3	Add PART NO.	lucky	lucky	Roy	2022/03/04
4	Change product model No.	lucky	lucky	Roy	2023/10/25

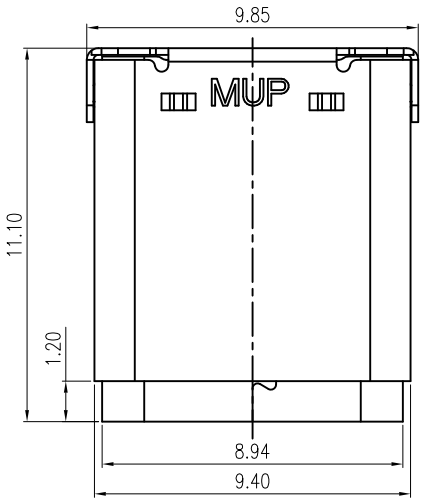

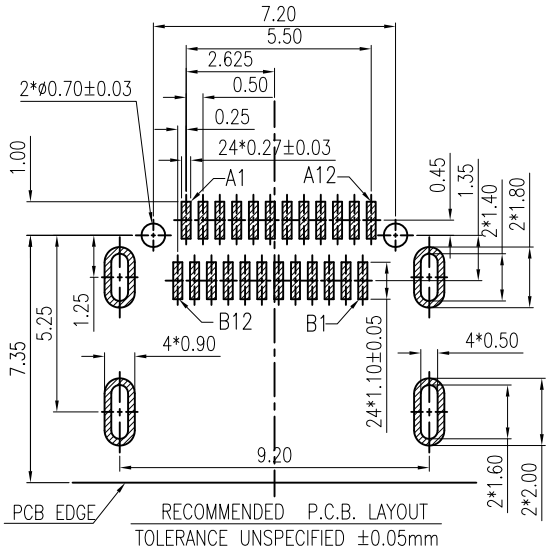

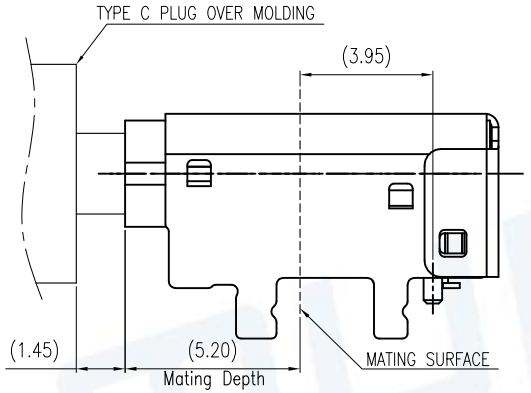

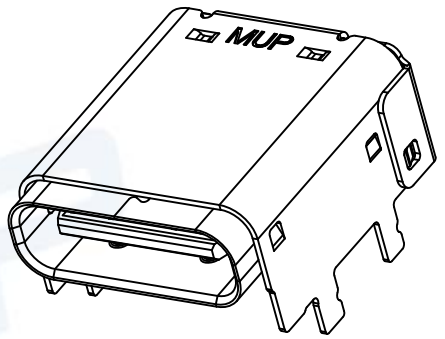

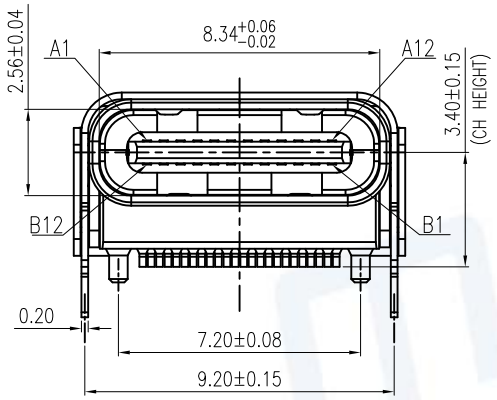

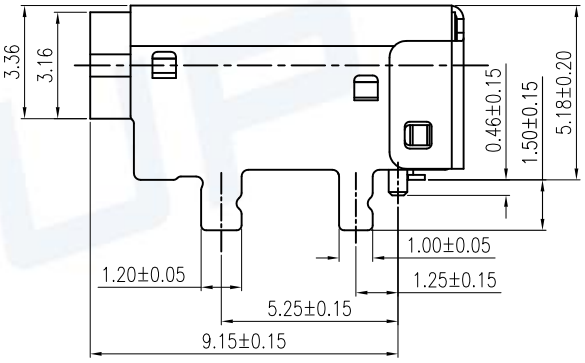

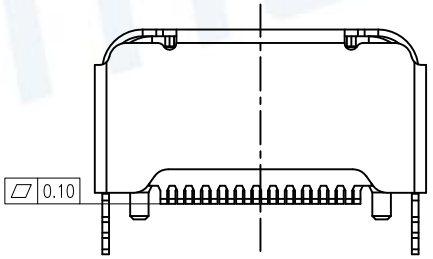

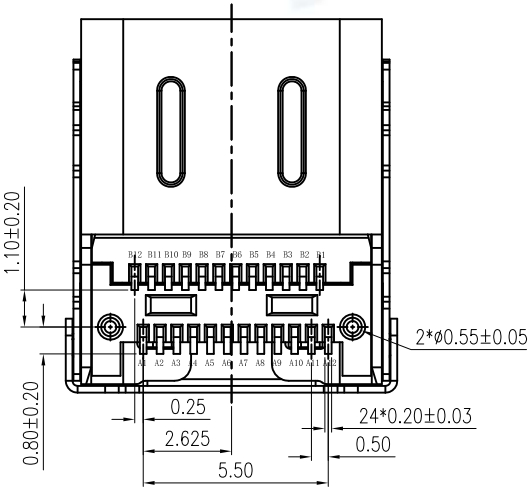

A1	GND	B12	GND
A2	SSTXP1	B11	SSRXP1
A3	SSTXN1	B10	SSRXN1
A4	VBUS	B9	VBUS
A5	CC1	B8	SBU2
A6	DP1	B7	DN2
A7	DN1	B6	DP2
A8	SBU1	B5	CC2
A9	VBUS	B4	VBUS
A10	SSRXN2	B3	SSTXN2
A11	SSRXP2	B2	SSTXP2
A12	GND	B1	GND
PIN	SIGNAL NAME	PIN	SIGNAL NAME

Model No.	Contact plating	Color
MUP-U20205-01	Au: 3u"	Black
MUP-U20205-04	Au: 15u"	Black
MUP-U20205-05	Au: 3u"	Blue

ITEM	PART NAME	Q'TY	MATERIAL	FINISH
1	Molding	1	THERMOPLASTIC	Black or Blue, UL94V-0
2	CONTACT	24	HIGH CONDUCTIVITY COPPER	Contact area: Au 3u" or 15u"
3	MID-PLATE	1	STAINLESS STEEL	RINSE
4	TOP SHELL	1	STAINLESS STEEL	Ni plated over all
5	OUTER SHELL	1	STAINLESS STEEL	Ni plated over all

NOTE:
1. MECHANICAL:
   1-1.MATING FORCE: 0.5~2.0Kgf
   1-2.UMMATING FORCE: Initial: 0.8~2.0Kgf
   After 500 to 10,000cycles: 0.6~2.0Kgf
   1-3.FREQUENCE:500±50 CYCLES/HOUR,10000 CYCLES;
2. ELECTRICAL CHARACTERISTICS:
   2-1. CURRENT RATING:
   VBUS Pins (A4,A9,B4,B9): 5A Max:
   1.25 Amps MAX. for Vconn (B5) with return path through the corresponding GND pins(Pin A1, A12, B1, B12).
   Other All Pins 0.25A/Pin
   2-2. INITIAL CONTACT RESISTANCE:40mΩ Max.
   2-3. INSULATION RESISTANCE:100MΩ MIN
   2-4. WITHSTANDING VOLTAGE:100V AC,1 MINUTE;
3. ENVIRONMENTAL
   TEMPERATRUE RANGE: -40°C TO +85°C.
4. Recommended thickness of steel mesh T=0.12mm.

RoHS PROCESS COMPLIANT

Unless otherwise specified, other tolerance are:

X	±0.40	X°	±5°
X.X	±0.30	X.X°	±4°
X.XX	±0.20	X.XX°	±3°
X.XXX	±0.10	X.XXX°	±2°

PROJ. | UNIT mm | SCALE 1:1

CUSTOMER DRAWING

MUP® MUP INDUSTRIAL CO.,LTD.

NAME: USB Type C Dual-Row SMT Receptacle

MODEL NO: MUP-U20205-XX

TYPE : 24P & USB 3.1 Board center height 3.40

DRAW	Roy	2020/02/15
CHECKED	lucky	2020/02/15
APPROVAL	lucky	2020/02/15

DWG NO.: DWG-U20205-XX-01

SHEET 1/2 | REVISION 4

REV.	DESCRIPTION OF REVISIONS	APPR.	CHKD.	DRAW.	DATE
1	Original reversion	lucky	lucky	Roy	2020/02/15
2	Add RECEPTACLE&PLUG MATED CONTITION	lucky	lucky	Roy	2021/05/13
3	Add PART NO.	lucky	lucky	Roy	2022/03/04
4	Change product model No.	lucky	lucky	Roy	2023/10/25

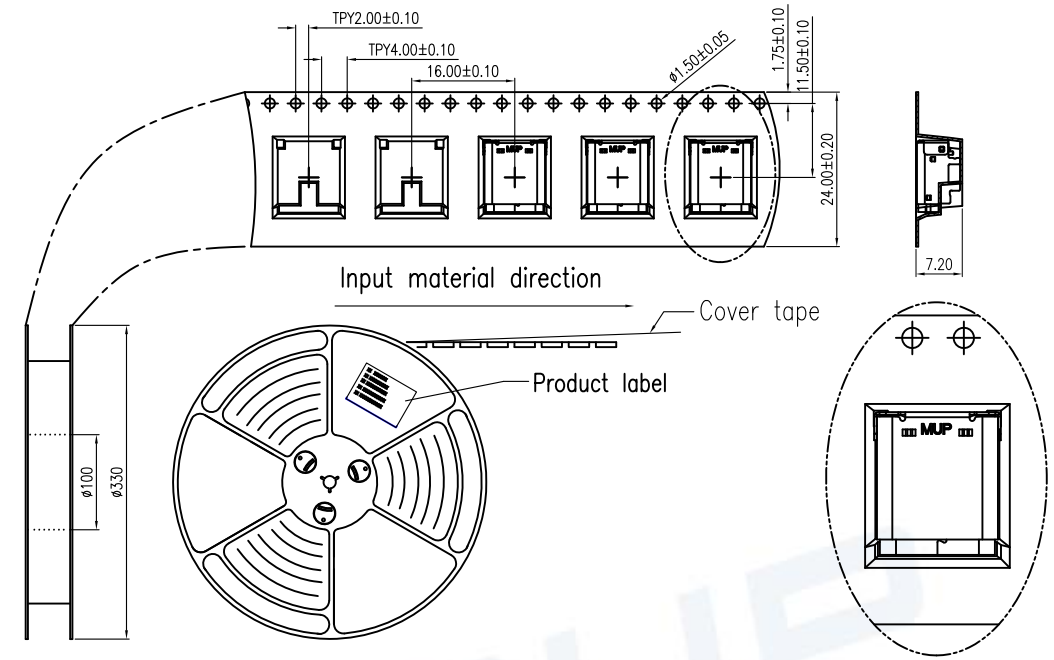

NOTES

1. NUMBER OF CONNECTORS:600PCS/REEL
2. LEAD TAPE LENGTH

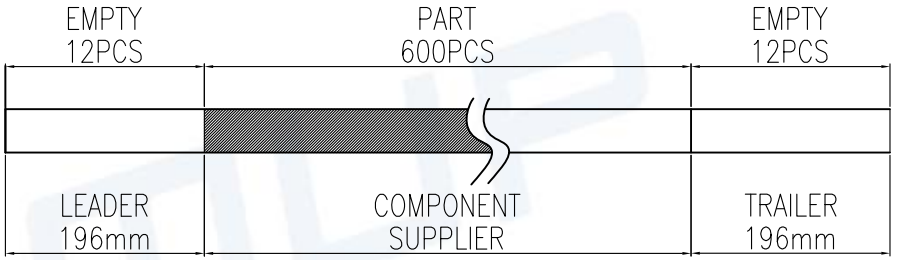

3. QUANTITY:6000/CARTON
4. WEIGHT :
   4.1 NET WEIGHT : 6.52 Kg
   4.2 GROSS WEIGHT : 10.7 Kg
5. Meas:350Lx350Wx315H mm

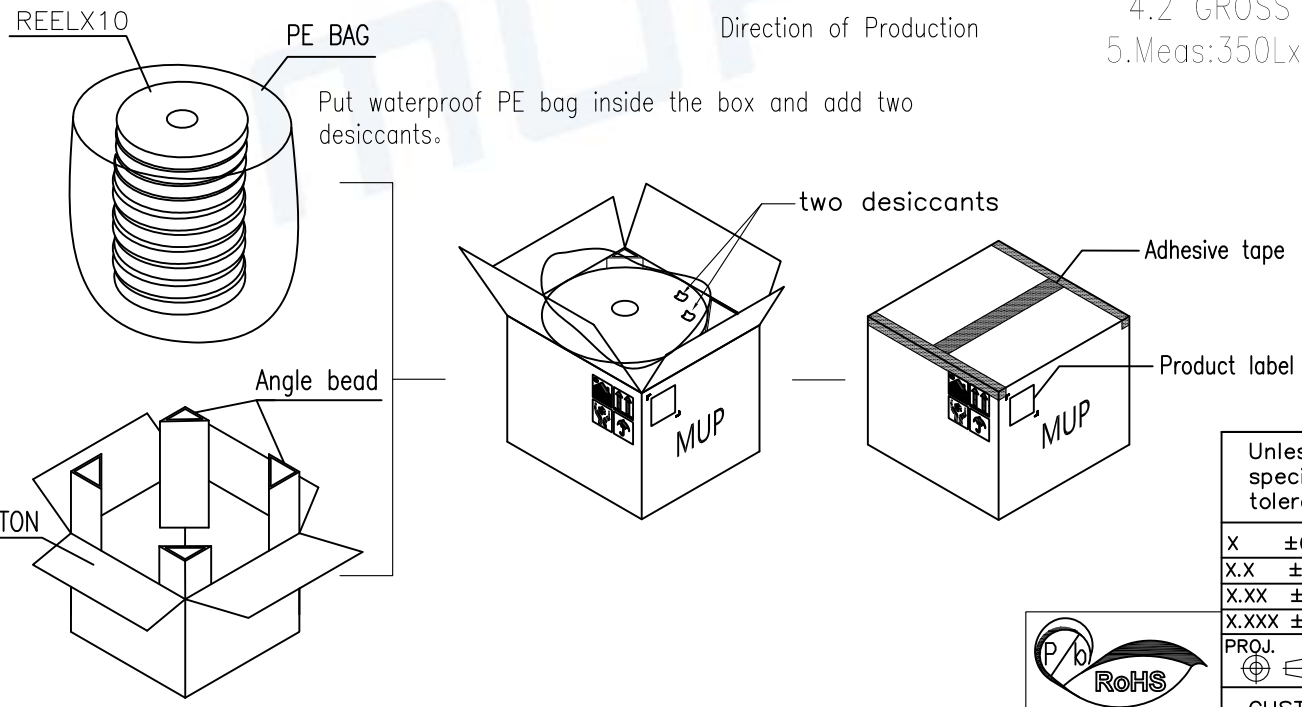

Unless otherwise specified, other tolerance are:			
X	±0.40	X°	±5°
X.X	±0.30	X.X°	±4°
X.XX	±0.20	X.XX°	±3°
X.XXX	±0.10	X.XXX°	±2°

PROJ.	UNIT	SCALE
	mm	1:1

CUSTOMER DRAWING

RoHS PROCESS COMPLIANT

MUP® MUP INDUSTRIAL CO.,LTD.

NAME:	USB Type C Dual-Row SMT Receptacle
MODEL NO:	MUP-U20205-XX
TYPE :	24P & USB 3.1 Board center height 3.40

DRAW	Roy 2020/02/15	DWG NO.: DWG-U20205-XX-01
CHECKED	lucky 2020/02/15	
APPROVAL	lucky 2020/02/15	SHEET 2/2 / REVISION 4