REV.	DESCRIPTION OF REVISIONS	APPR.	CHKD.	DRAW.	DATE
1	Original reversion	lucky	lucky	Roy	2024/04/17

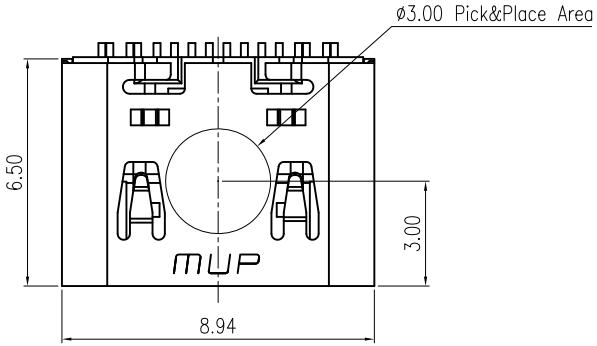

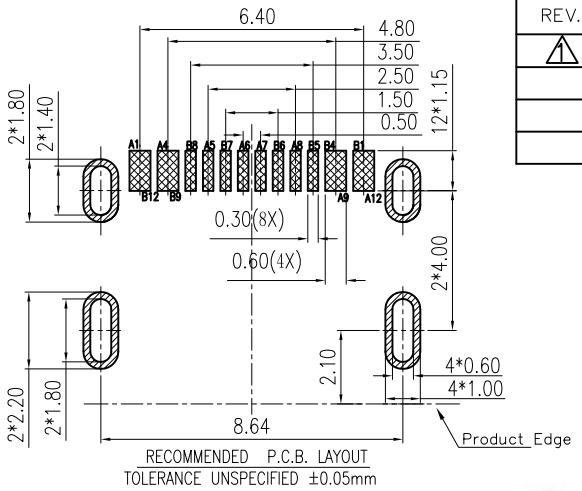

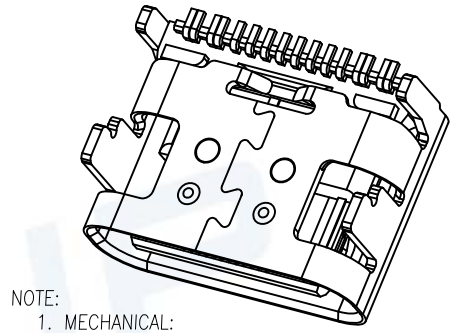

NOTE:
1. MECHANICAL:
   1-1 Insertion force: 5~20N
   1-2 Extraction force: 8~20N
   Extraction force: 10000 CYCLES 6-20N
   1-3.FREQUENCE:500±50 CYCLES/HOUR,10000 CYCLES;
2. ELECTRICAL CHARACTERISTICS:
   2-1. CURRENT RATING:
   VBUS Pins (A4,A9,B4,B9): 5A Max;
   1.25 Amps MAX. for Vconn (B5 of plug) with return path through the corresponding GND pins(Pin A1, A12, B1, B12). Other All Pins 0.25A/Pin
   2-2. INITIAL CONTACT RESISTANCE:40mΩ Max.
   2-3. INSULATION RESISTANCE:100MΩ MIN
   2-4. WITHSTANDING VOLTAGE:100V AC,1 MINUTE;
3. ENVIRONMENTAL
   TEMPERATRUE RANGE: -40°C TO +85°C.
4. Recommended thickness of steel mesh T=0.12mm.

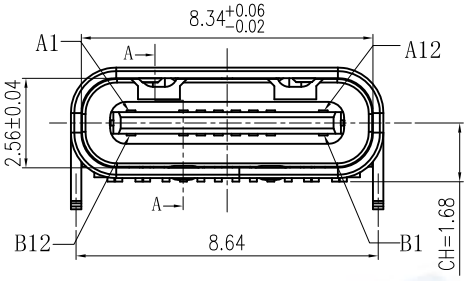

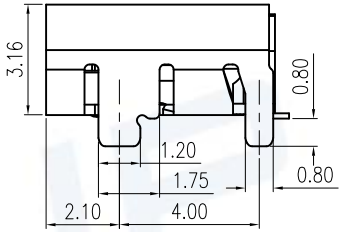

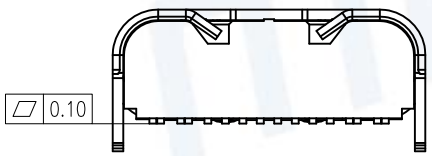

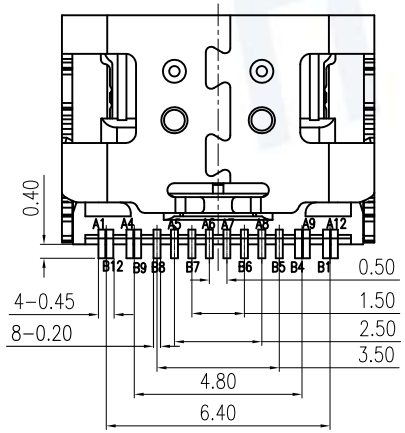

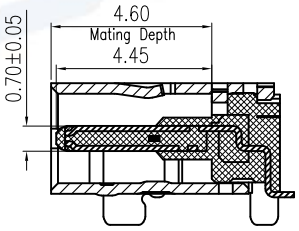

SECTION:A-A

A1	GND	B12	GND
A4	VBUS	B9	VBUS
A5	CC1	B8	SBU2
A6	DP1	B7	DN2
A7	DN1	B6	DP2
A8	SBU1	B5	CC2
A9	VBUS	B4	VBUS
A12	GND	B1	GND
PIN	SIGNAL NAME	PIN	SIGNAL NAME

Pb RoHS PROCESS COMPLIANT

ITEM	PART NAME	Q'TY	MATERIAL	FINISH
1	Molding	1	THERMOPLASTIC	Black, UL94V-0
2	CONTACT	16	HIGH CONDUCTIVITY COPPER	Contact area: Au G/F
3	SHELL	1	STAINLESS STEEL	Ni plated over all
4	MID-PLATE	1	STAINLESS STEEL	RINSE

Unless otherwise specified, other tolerance are:

X	±0.40	X°	±5°
X.X	±0.30	X.X°	±4°
X.XX	±0.20	X.XX°	±3°
X.XXX	±0.10	X.XXX°	±2°

PROJ. | UNIT mm | SCALE 1:1

CUSTOMER DRAWING

MUP® MUP INDUSTRIAL CO.,LTD.

NAME: USB Type C SINGLE-Row SMT Receptacle

MODEL NO: MUP-U20402-05

TYPE : 16Pin & Without Post on board L=6.50

DRAW	Roy 2024/04/17	DWG NO.: DWG-U20402-05-01
CHECKED	lucky 2024/04/17	
APPROVAL	lucky 2024/04/17	SHEET 1/2 / REVISION 1

REV.	DESCRIPTION OF REVISIONS	APPR.	CHKD.	DRAW.	DATE
1	Original reversion	lucky	lucky	Roy	2024/04/17

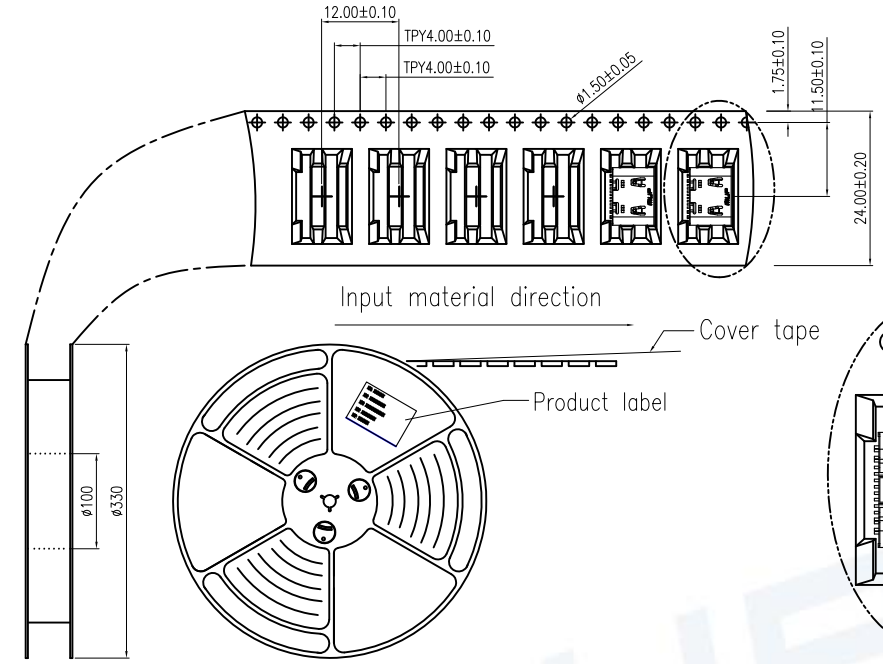

Direction of Production

NOTES

1. NUMBER OF CONNECTORS:1400PCS/REEL
2. LEAD TAPE LENGTH

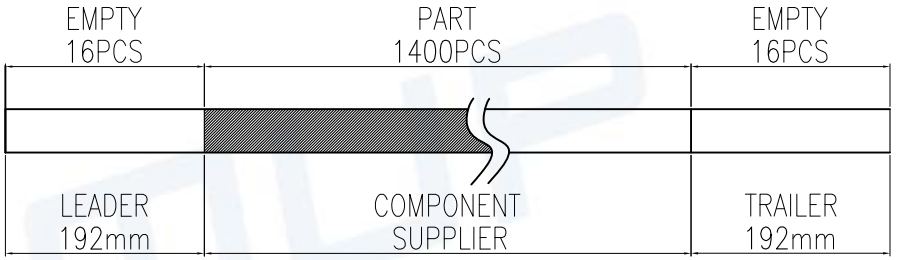

3. QUANTITY:14000/CARTON
4. WEIGHT :
   4.1 NET WEIGHT : 5.5 Kg
   4.2 GROSS WEIGHT : 10.5 Kg
5. Meas:350Lx350Wx315H mm

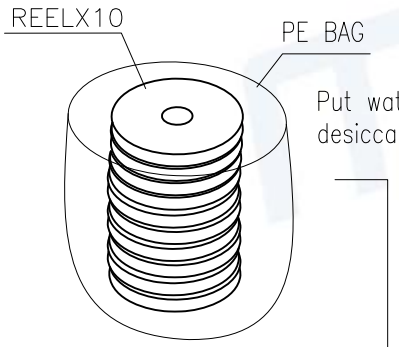

Put waterproof PE bag inside the box and add two desiccants.

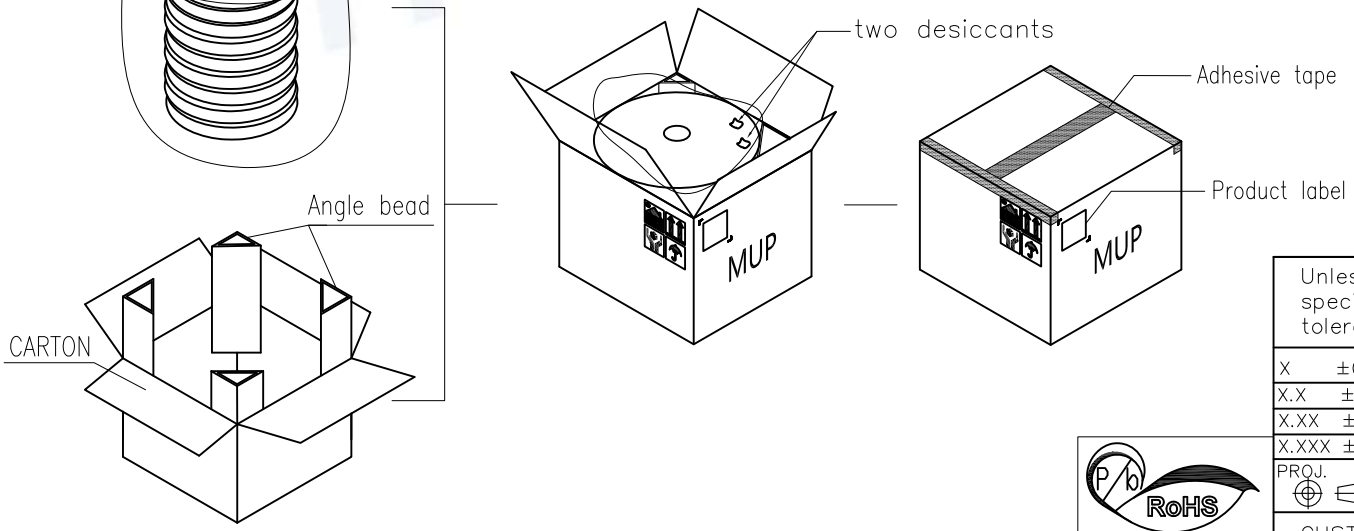

Unless otherwise specified, other tolerance are:			
X	±0.40	X°	±5°
X.X	±0.30	X.X°	±4°
X.XX	±0.20	X.XX°	±3°
X.XXX	±0.10	X.XXX°	±2°

PROJ.	UNIT	SCALE
	mm	1:1

CUSTOMER DRAWING

P/b RoHS PROCESS COMPLIANT

MUP® MUP INDUSTRIAL CO.,LTD.

NAME:	USB Type C SINGLE-Row SMT Receptacle
MODEL NO:	MUP-U20402-05
TYPE :	16Pin & Without Post on board L=6.50

DRAW	Roy 2024/04/17	DWG NO.: DWG-U20402-05-01
CHECKED	lucky 2024/04/17	
APPROVAL	lucky 2024/04/17	SHEET 2/2 / REVISION 1