REV.	DESCRIPTION OF REVISIONS	APPR.	CHKD.	DRAW.	DATE
1	Original reversion	lucky	lucky	Roy	2019.10.16
2	Optimize product mix	lucky	lucky	Roy	2021.07.12

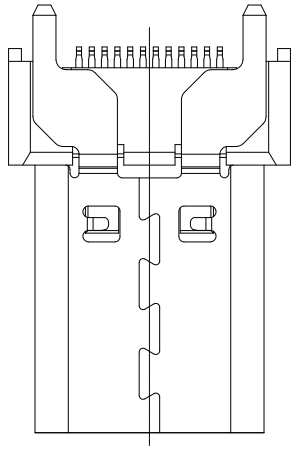

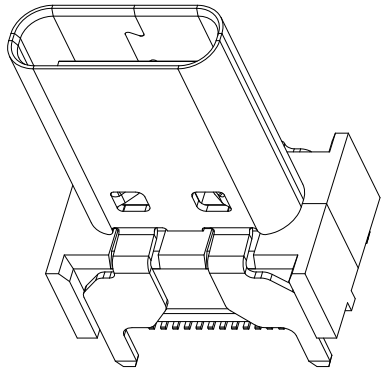

WITHOUT COVER

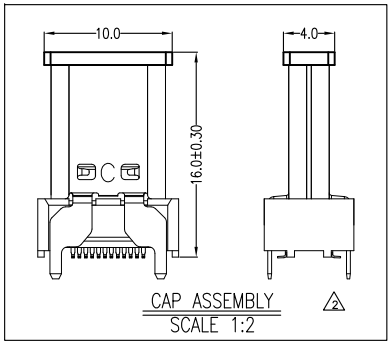

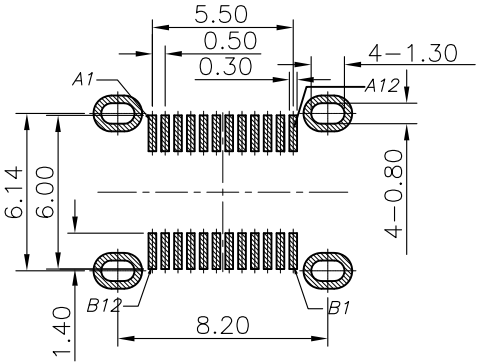

RECOMMEND P.C.B LAYOUT(COMPONENT SIDE)

TOLERANCE FOR PCB LAYOUT IS ± 0.05

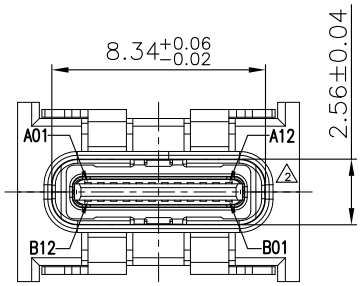

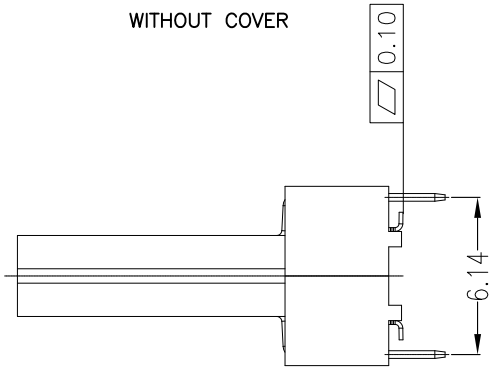

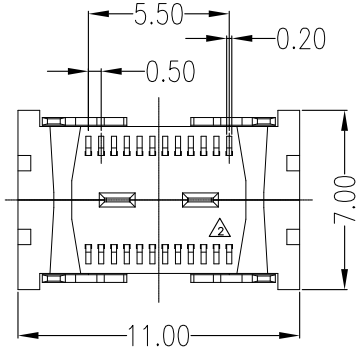

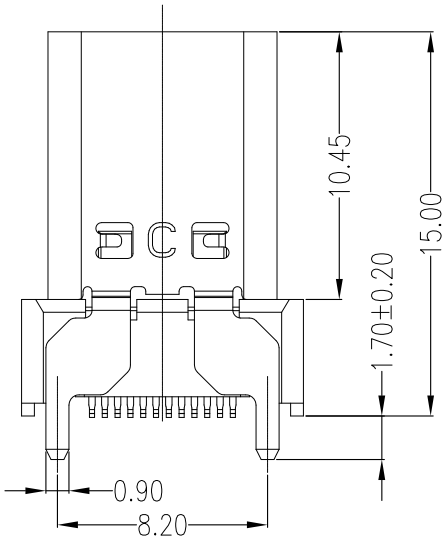

NOTE:

1.Contact Resistance:40mOHM Max.;
2.Dielectric Withstanding Voltage:100V AC For 1 Minute;
3.Insulation Resistance:100M OHM Min.;
4.Mating And Unmating Force:
Mating Force: 5~20N
Unmating Force: 8~20N(0~1000cycle);
6~20N(1001~10000cycle);
5.Durability:10000 Cycles;

USB TYPE−C PIN ASSIGNMENTS

PIN NUMBER	SIGNAL NAME	PIN NUMBER	SIGNAL NAME
A1	GND	B12	GND
A2	SSTXp1	B11	SSRXp1
A3	SSTXn1	B10	SSRXn1
A4	VBUS	B9	VBUS
A5	CC1	B8	SBU2
A6	Dp1	B7	Dn2
A7	Dn1	B6	Dp2
A8	SBU1	B5	CC2
A9	VBUS	B4	VBUS
A10	SSRXn2	B3	SSTXn2
A11	SSRXp2	B2	SSTXp2
A12	GND	B1	GND

ITEM	PART NAME	Q'TY	MATERIAL	FINISH
①	INSULATOR	1	THERMOPLASTIC	Black, UL94V−0
②	TOP CONTACT	1	COPPER ALLOY	Contact area:Gold plated
③	BOTTOM CONTACT	1	COPPER ALLOY	Contact area:Gold plated
④	MID PLATE	1	STAINLESS STEEL	------
⑤	GND PLATE	1	STAINLESS STEEL	Ni plated over all
⑥	SHELL	1	STAINLESS STEEL	Ni plated over all

Unless Otherwise specified, other tolerance are:

X. ±0.40	X°. ±5°
X.X ±0.30	X.X° ±4°
X.XX ±0.25	X.XX° ±3°
X.XXX±0.15	X.XXX°±2°

APPR.	LUCKY/2021.07.12
CHKD.	LUCKY/2021.07.12
DRAW.	Roy/2021.07.12

PROCESS COMPLIANT

MUP® MUP INDUSTRIAL CO.,LTD.

NAME: **USB Type C Vertical Mount Receptacle**

MODEL No: **MUP-U23004-1**

TYPE : **24Pin & USB 3.1 With GND-PLATE H= 15.0**

PRAT NO. :	DWG NO. :
U23004−1	DWG−U23004−1−001

PROJ.	UNIT	SCALE	SHEET	REVISION
	mm	1:1	1/2	2

REV.	DESCRIPTION OF REVISIONS	APPR.	CHKD.	DRAW.	DATE
1	Original reversion	lucky	lucky	Roy	2019.10.16
2	Optimize product mix	lucky	lucky	Roy	2021.07.12

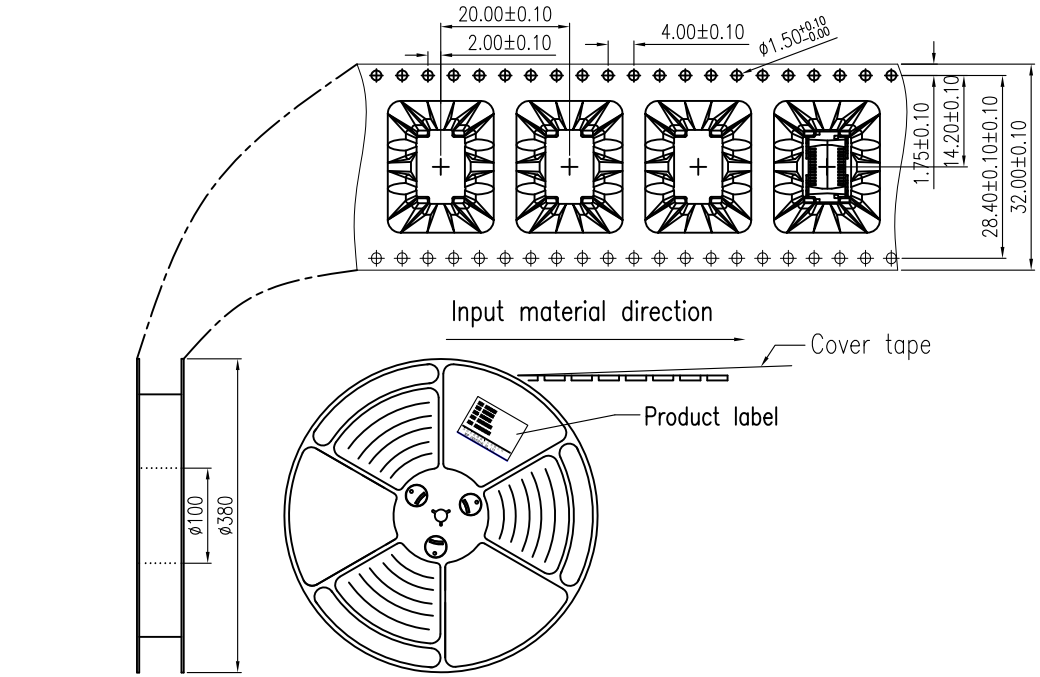

NOTES

1. NUMBER OF CONNECTORS:200PCS/REEL
2. LEAD TAPE LENGTH

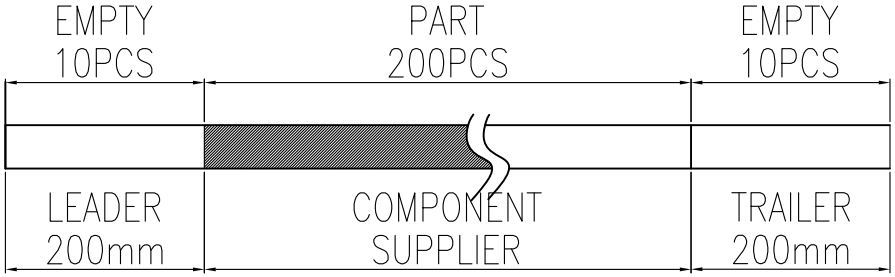

3. QUANTITY:1600/CARTON

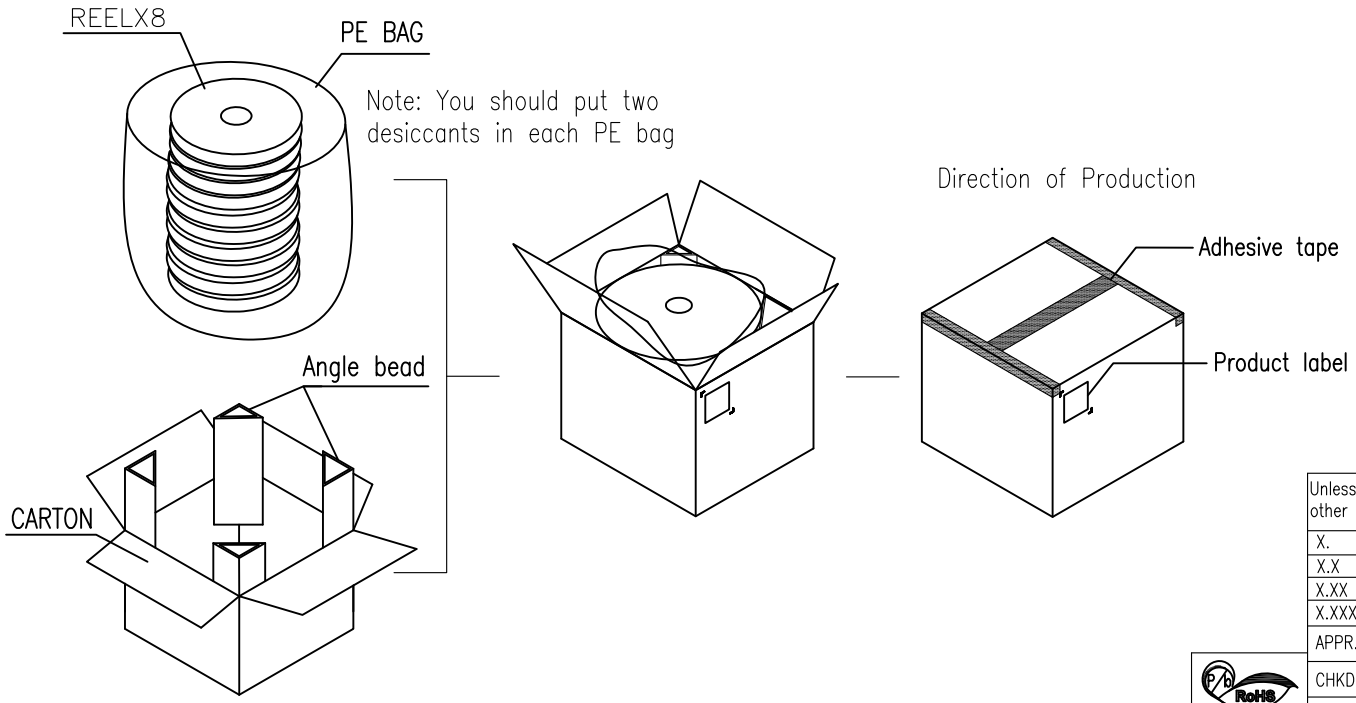

Unless Otherwise specified, other tolerance are:			
X.	±0.40	X°.	±5°
X.X	±0.30	X.X°	±4°
X.XX	±0.25	X.XX°	±3°
X.XXX	±0.15	X.XXX°	±2°

APPR.	LUCKY/2021.07.12
CHKD.	LUCKY/2021.07.12
DRAW.	Roy/2021.07.12

PROCESS COMPLIANT

MUP® MUP INDUSTRIAL CO.,LTD.

NAME: **USB Type C Vertical Mount Receptacle**

MODEL No: **MUP-U23004-1**

TYPE : **24Pin & USB 3.1 With GND-PLATE H= 15.0**

PRAT NO. :	DWG NO. :
U23004-1	DWG-U23004-1-001

PROJ.	UNIT	SCALE	SHEET	REVISION
	mm	1:1	2/2	2