REV.	DESCRIPTION OF REVISIONS	APPR.	CHKD.	DRAW.	DATE
A	Original reversion	lucky	lucky	Roy	2019.11.05

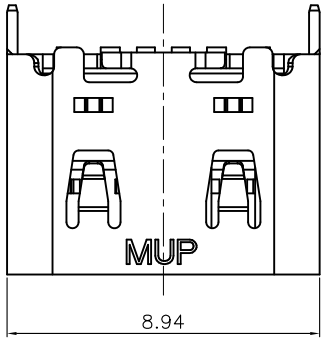

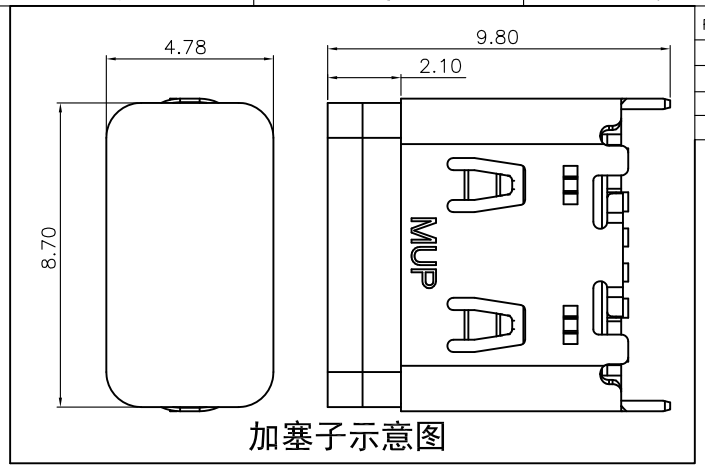

加塞子示意图

A5	CC1	B12	GND
A9	VBUS	B9	VBUS
A12	GND	B5	CC2
PIN	SIGNAL NAME	PIN	SIGNAL NAME

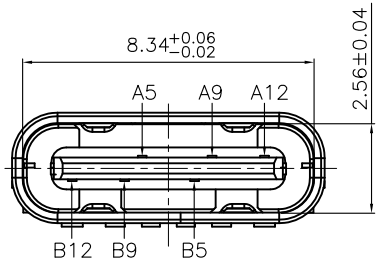

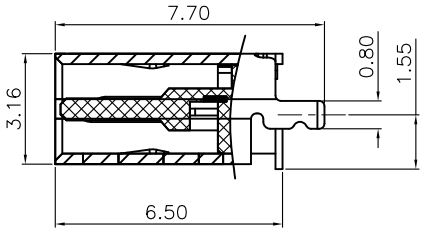

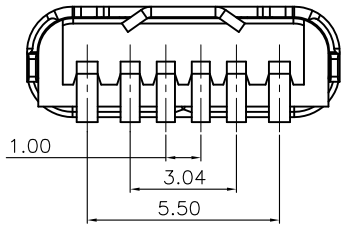

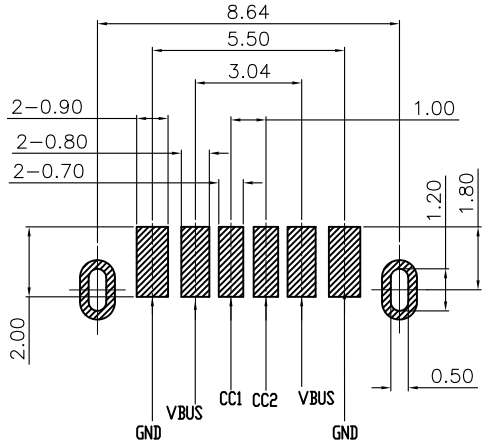

RECOMMENDED P.C.B. LAYOUT
TOLERANCE UNSPECIFIED ±0.05mm

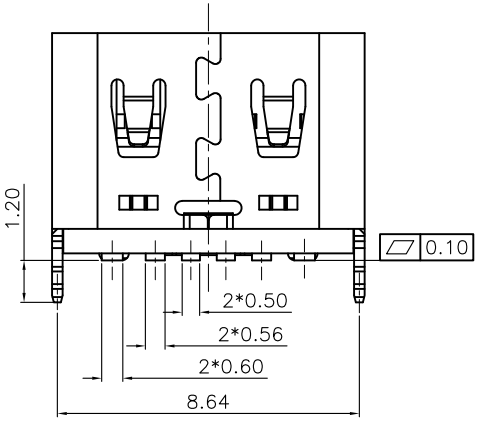

NOTE:
1. MECHANICAL:
   1−1 Insertion force: 5~20N
   1−2 Extraction force: 8~20N
   Extraction force: 10000 CYCLES 6−20N
   1−3.FREQUENCE:500±50 CYCLES/HOUR,10000 CYCLES;
2. ELECTRICAL CHARACTERISTICS:
   2−1. CURRENT RATING:
   VBUS Pins (A9,B9): 3.0A ,
   Vconn(B5) : 1.25A
   Other All Pins 0.25A
   2−2. INITIAL CONTACT RESISTANCE:40mΩ Max.
   2−3. INSULATION RESISTANCE:100MΩ MIN
   2−4. WITHSTANDING VOLTAGE:100V AC,1 MINUTE;
3. ENVIRONMENTAL
   TEMPERATRUE RANGE: −40°C TO +85°C.

ITEM	PART NAME	Q'TY	MATERIAL	FINISH
①	Molding	1	THERMOPLASTIC	Black, UL94V−0
②	CONTACT	1	COPPER ALLOY	Contact area:Gold plated over Ni.
③	SHELL	1	STAINLESS STEEL	Ni plated over all
④	MID−PLATE	1	STAINLESS STEEL	Cleaning

Unless Otherwise specified, other tolerance are:

X.	±0.40	X°.	±5°
X.X	±0.30	X.X°	±4°
X.XX	±0.25	X.XX°	±3°
X.XXX	±0.15	X.XXX°	±2°

APPR.	LUCKY/2019.11.05
CHKD.	LUCKY/2019.11.05
DRAW.	Roy/2019.11.05

RoHS PROCESS COMPLIANT

MUP® MUP INDUSTRIAL CO.,LTD.

NAME: **USB Type C Vertical Mount Receptacle**

MODEL No: **MUP-U23007-1**

TYPE : **6P With Cap Vertical Mount Height 6.50**

PRAT NO. :	DWG NO. :
U23007−1	DWG−U23007−1−001

PROJ.	UNIT	SCALE	SHEET	REVISION
	mm	1:1	1/1	1

REV.	DESCRIPTION OF REVISIONS	APPR.	CHKD.	DRAW.	DATE
⚠	Ooriginal reversion	lucky	lucky	Roy	2018.11.05

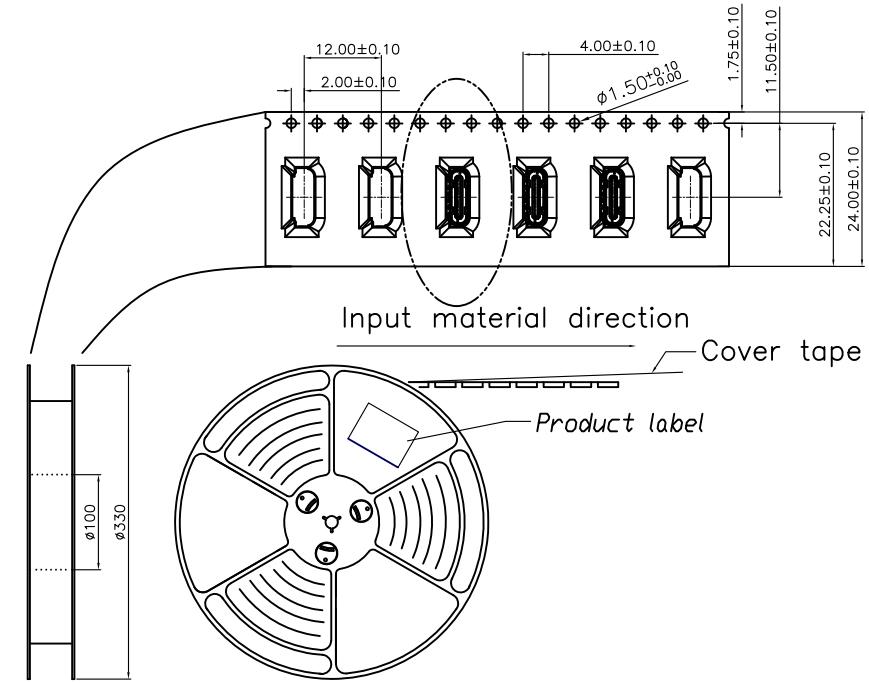

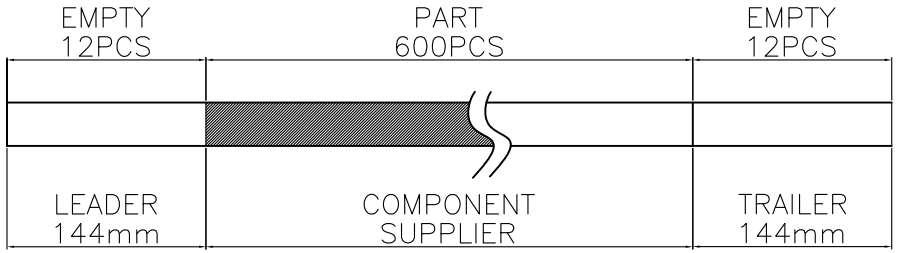

NOTE:

1.QUANTITY/REEL:600 PCS
數量/卷:600 PCS
QUANTITY/INNER CARTON:600 X 10 = 6000 PCS
數量/箱: 600 X 10 = 6000 PCS

2.FREE 12 CAVE IN THE FRONT CARRIER ADN FREE 12 CAVE IN THE END CARRIER.
包裝帶內圈空12格,外圈空12格.

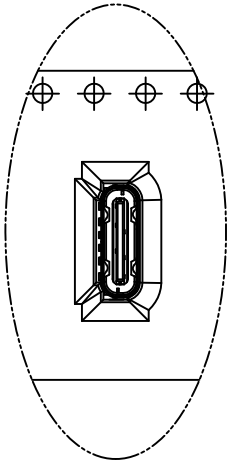

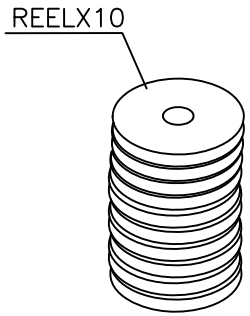

Note: You should put two desiccants in each PE bag

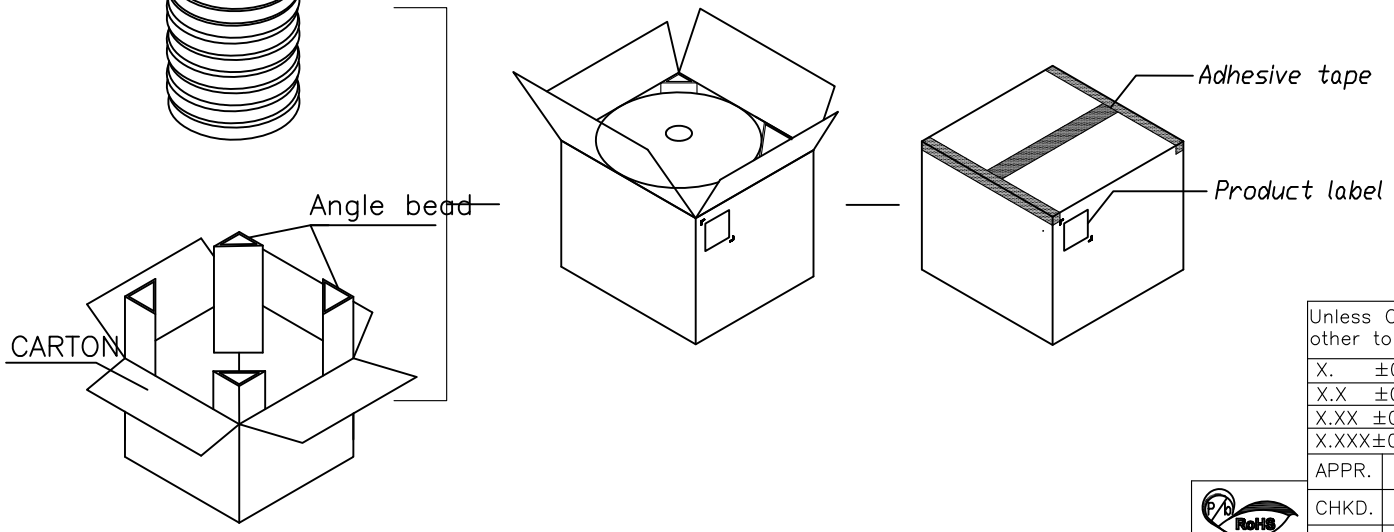

Unless Otherwise specified, other tolerance are:			
X.	±0.40	X°.	±5°
X.X	±0.30	X.X°	±4°
X.XX	±0.25	X.XX°	±3°
X.XXX	±0.15	X.XXX°	±2°

APPR.	LUCKY/2018.11.05
CHKD.	LUCKY/2018.11.05
DRAW.	Roy/2018.11.05

PROCESS COMPLIANT

MUP® MUP INDUSTRIAL CO.,LTD.

NAME: **USB Type C Vertical Mount Receptacle**

MODEL No: **MUP-U23007-1**

TYPE : **6P WIth Cap Vertical Mount Helght 6.50**

PRAT NO. :	DWG NO. :			
U23007-1	DWG-U23007-1-001			
PROJ.	UNIT mm	SCALE 1:1	SHEET 2/2	REVISION 1